BP EXPLORATION (CASPIAN SEA) LTD
SUBSEA OPERATIONS

INSPECTION, MAINTENANCE & REPAIR (IMR)

UNDERWATER WELDING REPAIR METHOD STATEMENT

Doc. No. 068030-02-11-D-511

A	Issued for Bid Purpose Only	FA	MDS	KH		04/02/11
REV	DESCRIPTION	Prepared	Checked	Approved		Date

THIS IS AN UNCONTROLLED COPY

INDEX

1. INTRODUCTION

1.1 Purpose

This purpose of this document is to provide and overview of the method for carrying out the wet welding repair on a Platform.

1.2 General

Specific areas around the conductors of the platform are required to be repaired in order to strengthen the jacket. The repair workscope is to be performed at 29m water depth.

1.3 Project Overview

1.3.1 Project Description

In order to complete the required works, Saipem have mobilized a mobile saturation system onto the DBA (Derrick Barge Azerbaijan). The DBA will be moored on eight (8) anchors on the North-West Side of the platform. Figure 1.3.1.1 shows the DBA in position at the platform.

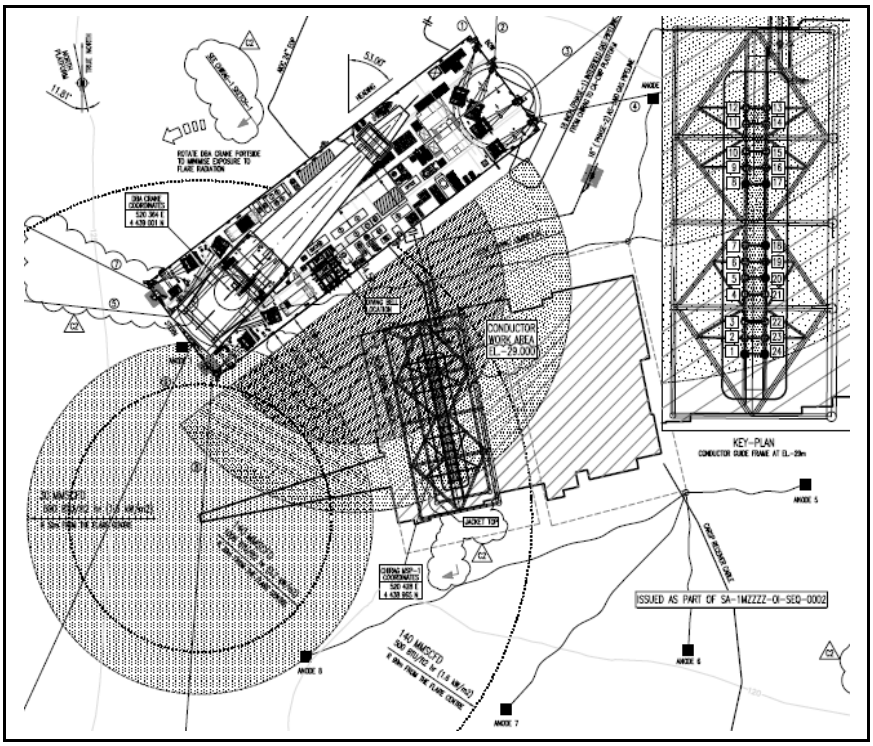

Figure 1.3.1.1: DBA Mooring Next to Platform

The Sat system is a twelve (12) man mobile diving system capable of operating to 200m water depth. The Platform repair workscope is to be performed at 29m water depth.

The Scope of work for the project involves the installation of stiffener plates around specific conductors as shown in figure 1.3.1.2. The priority of the work is to install stiffeners around 6

conductors, with follow-up work involving the installation of stiffeners around a further 10 conductors.

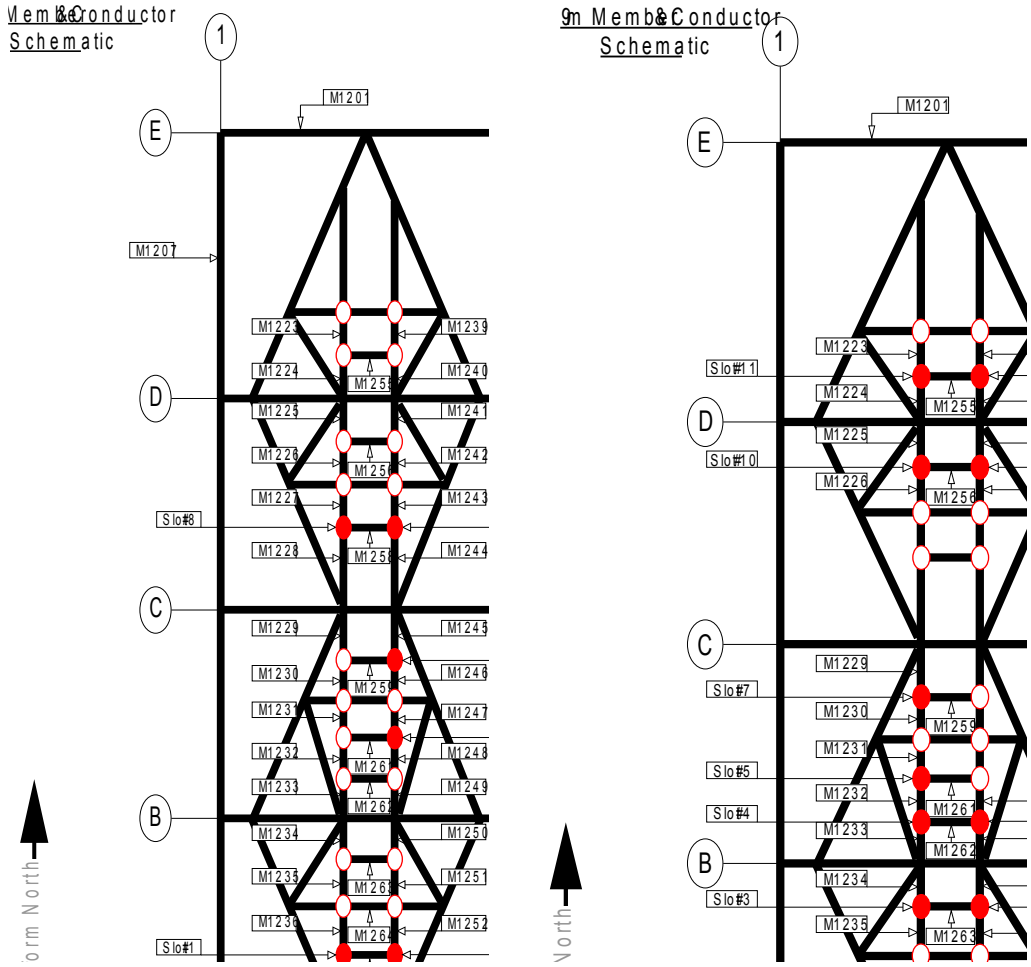

Figure 1.3.1.2: Platform Conductor Repair Layout Priority 6 + Additional 10

The stiffeners to be installed on the conductors will be fabricated offshore upon completion of all the required measurements. The stiffener design comprises of a 15mm profiled plate with two (2) profiled end diffusers. Figure 1.3.1.3 shows an example of the plate with the diffusers installed.

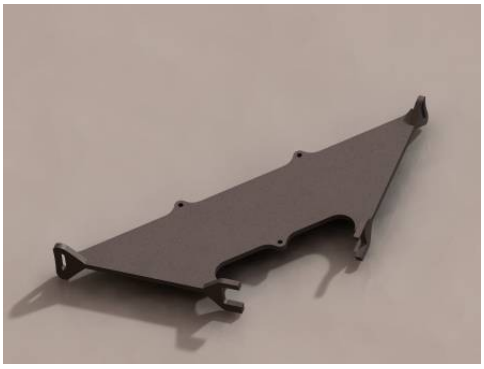

Figure 1.3.1.3: Typical 90 Degree Stiffener c/w End Diffusers

2. REPAIR METHODOLOGY

2.1 General Project Description

The method of repair for the platform involves the use of saturation divers installing stiffeners to the appropriate conductors utilizing wet welding techniques. As the repair work is being performed from a moored barge, extended umbilical techniques will be utilized in order to reach all the required repair locations.

Prior to any repair work commencing, the divers are required to setup there deployment and safety lines. For the deployment of equipment to site, the divers will have a down-line connected from the DBA to the corner of the Platform. From there, a taut wire will be setup to allow the diver to connect and move equipment along the taut wire to the exact work location. For umbilical tending, a second taut wire will be setup that the diver will connect their umbilical to at 35m and 5m lengths. This will prevent the diver for going to the surface in case of an emergency situation. Figure 2.1.1 shows the setup of the divers aids and safety measures.

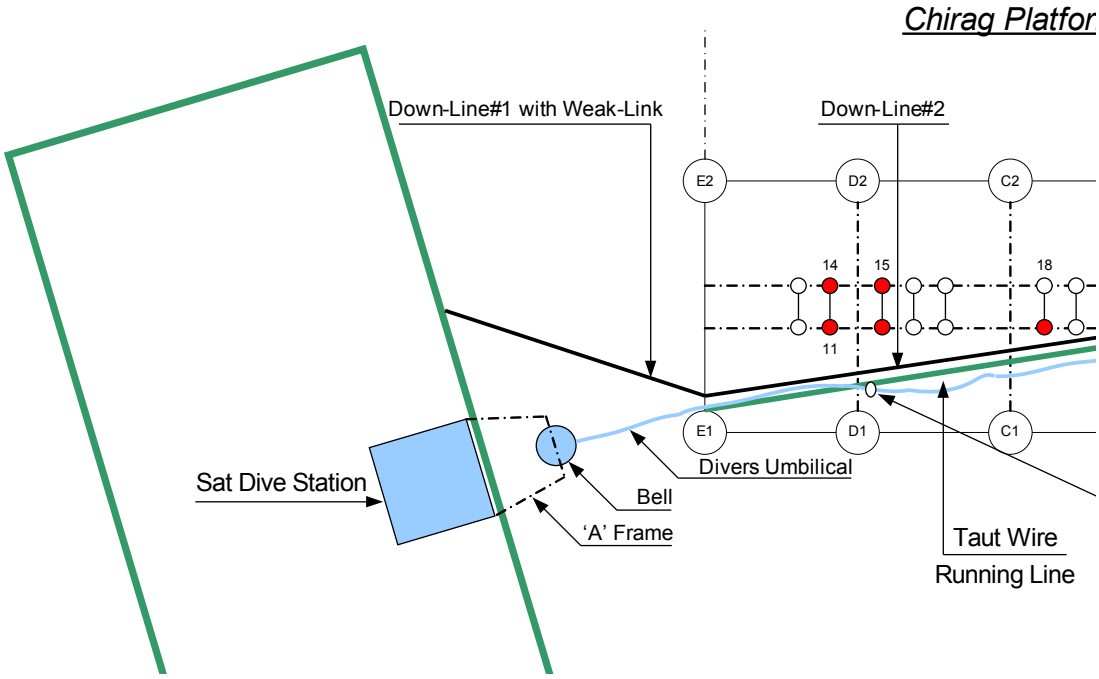

Figure 2.1.1: Divers Aid and Safety Measures Setup

2.2 GENERAL PHILOSOPHY OF OPERATIONS

After completion of the initial setup, the divers must perform a sequence of activities on each conductor in order to complete the required repair. The sequence for each repair is as follows –

- Setup taut wires to appropriate conductor.
- Deploy Cleaning equipment to worksite.
- Clean each brace on the appropriate conductor.
- Recover Cleaning Equipment and deploy metrology equipment.
- Perform OD measurements of each Brace.
- Perform angular metrology measurements between each brace (smallest brace will be used as the reference) to provide the overall shape of each stiffener.
- Perform centre line checks of each brace on the conductor.
- Recover Metrology Equipment to Surface.
- Using the measurements taken from the metrology, fabricate test plate.
- Deploy Test Plate to worksite. If the test plate fits, prepare the final stiffener as per the test piece and install the stiffener. If test plate does not fit, further measurements will be taken and the test plate modified until the correct fit is obtained.
- Fabricate Stiffener (90 Degree or 180 Degree) and deploy to worksite.
- Deploy welding equipment to site.
- Divers to install stiffener using pre-welding installation aids.
- Diver to tack weld stiffener in place.
- Remove installation aids and recover to surface.
- Diver to complete welding of stiffener.
- Recover welding equipment to surface.

The following sections describe the philosophy for each operation required to be carried out during the repair workscope.

To summarise the approach for each of the stiffener locations a decision tree/flow chart has been produced. Figure 2.2.1 shows the decision tree for the operation.

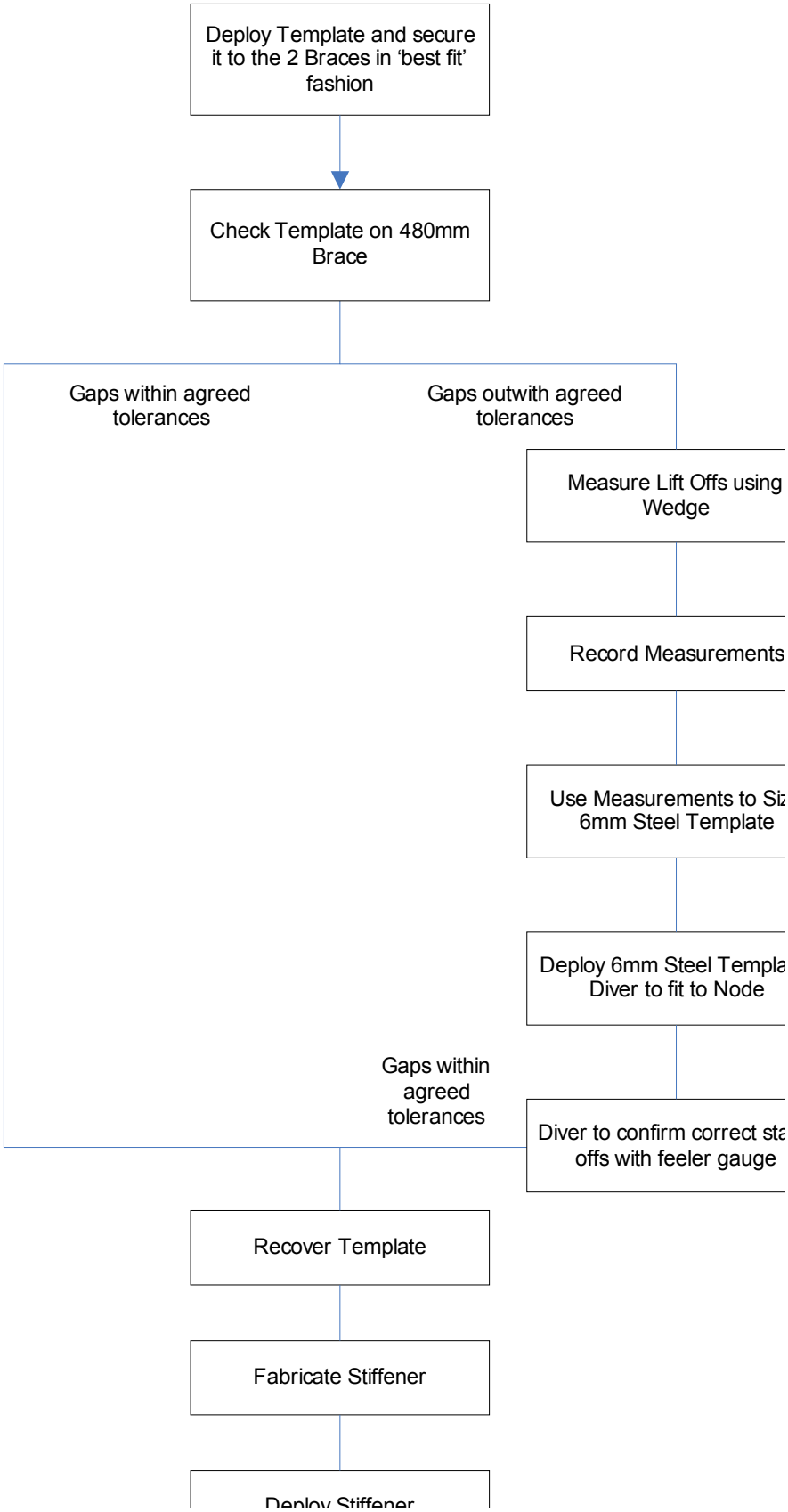

Figure 2.2.1 : Decission Tree for Stiffener Measurements

2.2.1 Cleaning of Braces

The cleaning of each brace is accomplished by utilizing a LP grit cleaning system. The system mixes grit in with water and sends the mixture to the diver via a gun 'like' hand held tool. The diver then aims the tool at the required area to be cleaned and activities the tool. The low pressure mixture will remove any growth or rust that may be required to be removed.

2.2.2 OD Measurements

For the measurements of the braces, the OD is measured by use of a custom made gauge device. Figure 2.2.2.1 shows an example of the unit.

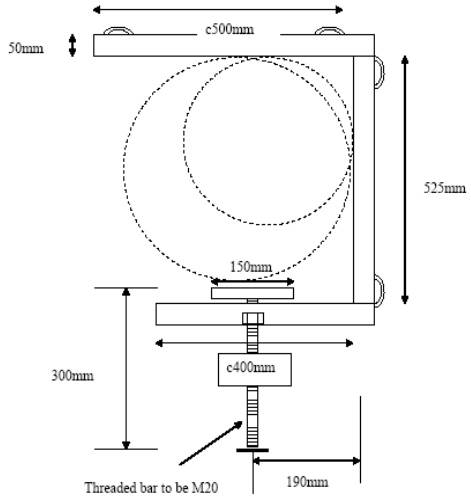

Figure 2.2.2.1: OD Measuring Device

The unit is placed over the brace, the diver then closes the base plate by rotating it. Once the plate comes into contact with the brace, the base plate is lock off by means of a second 'locking' nut. The unit is then removed from the brace, after which the diver can measure the distance between the top of the unit and the base plate. This value will then provide the OD of the brace.

2.2.3 Brace Angular Measurements

In order to measure the angle between the braces, a custom made expandable fan 'like' device was made and utilized. Figure 2.2.3.1 shows an example of the device utilized to measure the 90 degree sections.

Figure 2.2.3.1: Brace Angular Measuring Device (90 Degree Version)

The device is inserted in between the two braces to be measured. The side of the brace that is contact with the smaller brace is strapped into place using cargo straps, this is the reference face. The device is the opened until it makes contact with the next brace. If the two braces have a matching centreline, the device should sit flush with the second brace. If the centrelines are not matching (i.e. one brace is higher/lower to the other), the device should be rotated so that middle point of the plate makes contact with the brace. This will however produce gaps on either side of the face of the plate. These gaps will also be measure using gauge devices. Once the plate is in position, the locking nuts will be tightened and the measuring device removed and sent to the surface.

2.2.4 Centre-Line Measurements of Braces

The centreline of two braces can be compared with the use of a standoff and spirit level. Figure 2.2.4.1 shows the setup of the stand off on the brace. The standoff is fabricated so that when installed on the smaller brace, the top of the standoff should be level with the top of the larger brace if the centre points of the two (2) braces are at the same level.

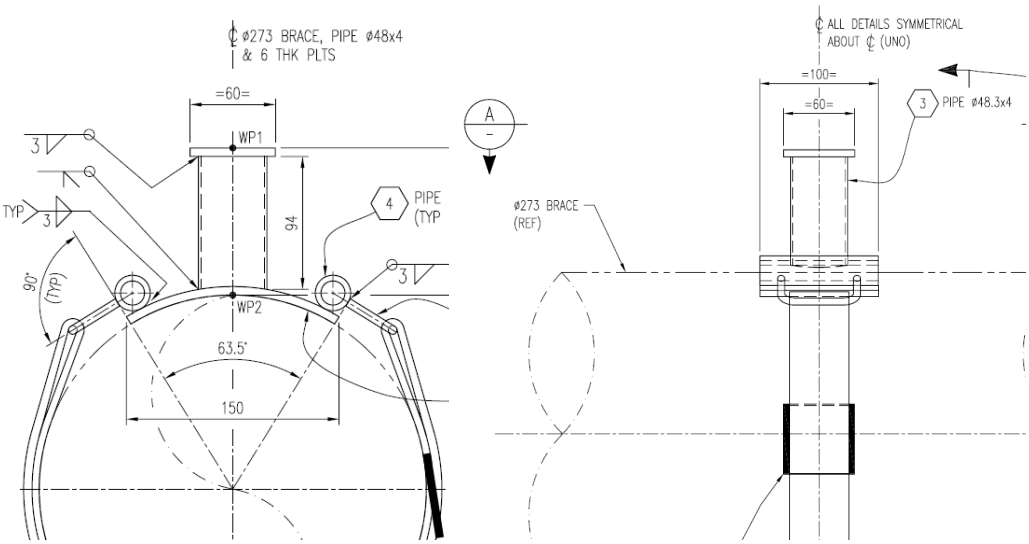

Figure 2.2.4.1: Standoff Installation

When the standoff is in place, the spirit level is laid on top of the standoff and the larger brace. If the spirit level is not measuring level, the spirit level should be lifted until the device measures level, after which the gap between the spirit level and the brace/standoff should be measured and recorded. These measurements are then used to calculate the offset between centrelines.

As well as the centreline measurement, the angle of the brace is measured to confirm the angle at which the brace is tilting. In order to measure this, the spirit level is placed onto the brace. If not level, the spirit level is lifted until it is level and the gap measured. See figure 2.2.4.2 for an example of this technique.

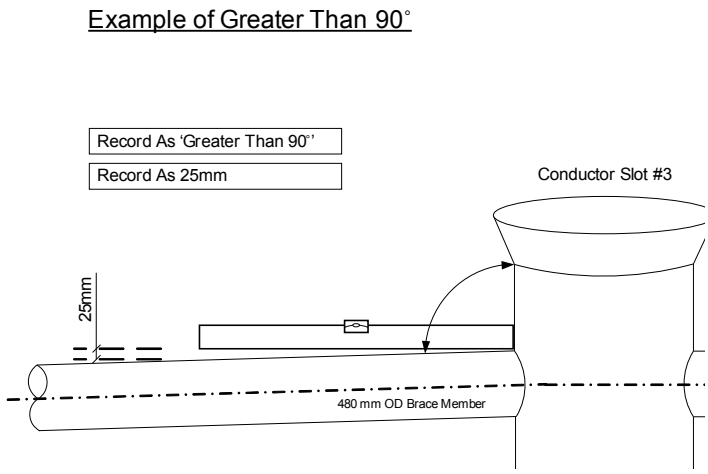

Figure 2.2.4.2: Brace Angular Measurement Example

2.2.5 Installation of Test Plate/Stiffener

Once all the measurements have been taken, a test piece (lighter version of the final stiffener) will be fabricated to the measurements and deployed to the work site for a test fit. The divers will place the test piece into position and ensure the fit is within specified tolerances. If the test piece does not fit, further measurements will be taken and the test piece shall be modified. Once the test plate is the correct size and fits within tolerance, the main stiffener shall be fabricated and deployed to site. The main stiffener is a large 15mm plate and can weigh between 20-60 Kg (90 degree and 180 degree plates). In order to assist the diver in handling the plate, buoyancy will be installed on each plate so as to make the in water weight of the plate approx 5-10 kg. Once the diver has the plate on site, the diver will install the plate using custom made plate clamps and cargo straps. See Figure 8 for an example of the pre-welding installation.

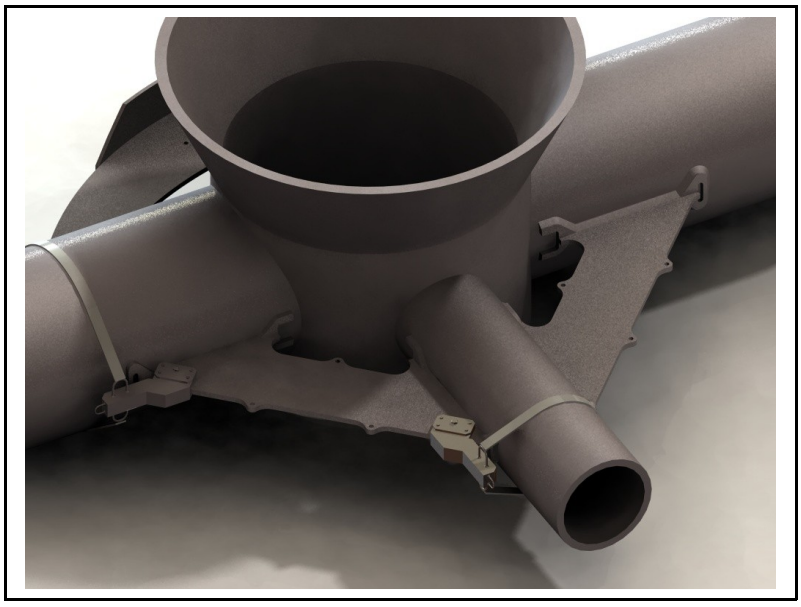

Figure 2.2.5.1: Stiffener Pre-Welding Installation

Once the plate is in position ready for welding, the diver will commence with tack welding the plate into position. Upon completion of the tack welding, the installation aids may be removed to allow the diver better access during the weld out of the plate. The plate will then be welded out using wet welding techniques.