ABSTRACT

"**HAPTICS"--** a technology that adds the sense of touch to virtual environment. Haptic interfaces allow the user to feel as well as to see virtual objects on a computer, and so we can give an illusion of touching surfaces, shaping virtual clay or moving objects around.

The sensation of touch is the brain's most effective learning mechanism --more effective than seeing or hearing—which is why the new technology holds so much promise as a teaching tool.

Haptic technology is like exploring the virtual world with a stick. If you push the stick into a virtual balloon push back .The computer communicates sensations through a haptic interface –a stick, scalpel, racket or pen that is connected to a force-exerting motors.

With this technology we can now sit down at a computer terminal and touch objects that exist only in the "mind" of the computer. By using special input/output devices (joysticks, data gloves, or other devices), users can receive feedback from computer applications in the form of felt sensations in the hand or other parts of the body. In combination with a visual display, haptics technology can be used to train people for tasks requiring hand-eye coordination, such as surgery and space ship maneuvers.

It can also be used for games in which you feel as well as see your interactions with images. For example, you might play tennis with another computer user somewhere else in the world. Both of you can see the moving ball and, using the haptic device, position and swing your tennis racket and feel the impact of the ball.

In this paper we explicate how sensors and actuators are used for tracking the position and movement of the haptic device moved by the operator. We mention the different types of force rendering algorithms. Then, we move on to a few applications of Haptic

Technology. Finally we conclude by mentioning a few future developments.

INTRODUCTION

1

Haptics refers to sensing and manipulation through touch. The word comes from the Greek 'haptesthai', meaning *'to contact or touch'.*

Haptic technology refers to technology that interfaces the user with a virtual environment via the sense of touch by applying forces, vibrations, and/or motions to the user. This mechanical stimulation may be used to assist in the creation of virtual objects (objects existing only in a computer simulation), for control of such virtual objects, and to enhance the remote control of machines and devices (teleoperators). This emerging technology promises to have wide-reaching applications as it already has in some fields.

For example, haptic technology has made it possible to investigate in detail how the human sense of touch works by allowing the creation of carefully controlled haptic virtual objects. These objects are used to systematically probe human haptic capabilities, which would otherwise be difficult to achieve. These new research tools contribute to our understanding of how touch and its underlying brain functions work. Although haptic devices are capable of measuring bulk or reactive forces that are applied by the user, it should not to be confused with touch or tactile sensors that measure the pressure or force exerted by the user to the interface.

Input devices such as the keyboard or the mouse translate human movements into actions on the screen but provide no feedback to the user about those actions. Haptics incorporates both touch (tactile) and motion (kinesthetic) elements. For applications that simulate real physical properties—such as weight, momentum, friction, texture, or resistance—haptics communicates those properties through interfaces that let users "feel" what is happening on the screen.

HAPTIC SYSTEMS

a) Basic system configuration

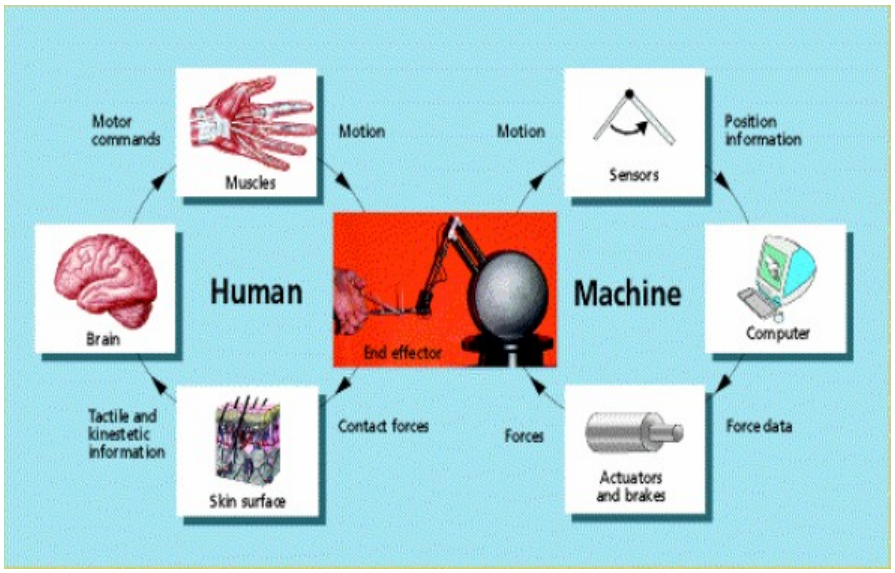

Figure : ***Working of haptic system***

Basically a haptic system consist of two parts namely the human part and the machine part. In the figure shown above, the human part (left) senses and controls the position of the hand, while the machine part (right) exerts forces from the hand to simulate contact with a virtual object. Also both the systems will be provided with necessary sensors, processors and actuators. In the case of the human system, nerve receptors performs sensing, brain performs processing and muscles performs actuation of the motion performed by the hand while in the case of the machine system, the above mentioned functions are performed by the encoders, computer and motors respectively.

b) Working:

Haptics system includes

- Sensor(s)
- Actuator (motor) control circuitry
- One or more actuators that either vibrate or exert force
- Real-time algorithms (actuator control software, which we call a "player") and a haptic effect library
- Application programming interface (API), and often a haptic effect authoring tool

The Immersion API is used to program calls to the actuator into your product's operating system (OS). The calls specify which effect in the haptic effect library to play.

When the user interacts with your product's buttons, touch screen, lever, joystick/wheel, or other control, this control-position information is sent to the OS, which then sends the play command through the control circuitry to the actuator.

b) Haptic Information

Basically the haptic information provided by the system will be the combination of (i) **Tactile information** and (ii) **Kinesthetic information.**

Tactile information refers the information acquired by the sensors which are actually connected to the skin of the human body with a particular reference to the spatial

distribution of pressure, or more generally, tractions, across the contact area. For example when we handle flexible materials like fabric and paper, we sense the pressure variation across the fingertip. This is actually a sort of tactile information. Tactile sensing is also the basis of complex perceptual tasks like medical palpation, where physicians locate hidden anatomical structures and evaluate tissue properties using their hands.

Kinesthetic information refers to the information acquired through the sensors in the joints.

Interaction forces are normally perceived through a combination of these two informations.

c) Creation of Virtual environment (Virtual reality)

Virtual reality (VR) is the technology which allows a user to interact with a computer-simulated environment, whether that environment is a simulation of the real world or an imaginary world. Most current virtual reality environments are primarily visual experiences, displayed either on a computer screen or through special or

stereoscopic displays, but some simulations include additional sensory information, such as sound through speakers or headphones. Some advanced, haptic systems now include tactile information, generally known as force feedback, in medical and gaming applications. Users can interact with a virtual environment or a virtual artifact (VA) either through the use of standard input devices such as a keyboard and mouse, or through multimodal devices such as a Cyber glove, Phantom, Logitech Mouse etc.

The simulated environment can be similar to the real world, for example, simulations for pilot or combat training, or it can differ significantly from reality, as in VR games. In practice, it is currently very difficult to create a high-fidelity virtual reality experience, due largely to technical limitations on processing power, image resolution and communication bandwidth. However, those limitations are expected to eventually be overcome as processor, imaging and data communication technologies become more powerful and cost-effective over time.

Figure : *Flight simulators*

Virtual Reality is often used to describe a wide variety of applications, commonly associated with its immersive, highly visual, 3D environments. The

development of CAD software, graphics hardware acceleration, head mounted displays; database gloves and miniaturization have helped popularize the motion. The most successful use of virtual reality is the computer generated 3-D simulators. The pilots use flight simulators. These flight simulators have designed just like cockpit of the airplanes or the helicopter. The screen in front of the pilot creates virtual environment and the trainers outside the simulators commands the simulator for adopt different modes. The pilots are trained to control the planes in different difficult situations and emergency landing. The simulator provides the environment. These simulators cost millions of dollars.

The virtual reality games are also used almost in the same fashion. The player has to wear special gloves, headphones, goggles, full body wearing and special sensory input devices. The player feels that he is in the real environment. The special goggles have monitors to see. The environment changes according to the moments of the player. These games are very expensive.

d) Haptic feedback

Virtual reality (VR) applications strive to simulate real or imaginary scenes with which users can interact and perceive the effects of their actions in real time. Ideally the user interacts with the simulation via all five senses. However, today's typical VR applications rely on a smaller subset, typically vision, hearing, and more recently, touch.

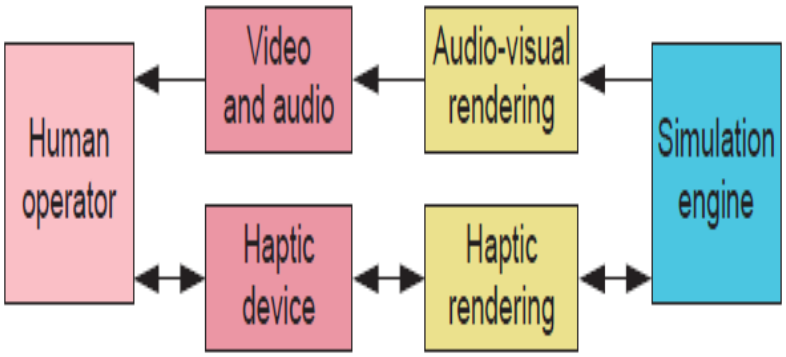

Figure : ***Architecture for Haptic feedback***

Figure shows the basic architecture for a virtual reality application incorporating visual, auditory, and haptic rendering.

The application's main elements are:

- **Simulation engine**: Responsible for computing the virtual environment's behavior over time.
- **Visual, auditory, and haptic rendering algorithms**: Compute the virtual environment's graphic, sound, and force responses toward the user.
- **Transducers**: Convert visual, audio, and force signals from the computer into a form the operator can perceive.
- **Rendering:** Process by which desired sensory stimuli are imposed on the user to convey information about a virtual haptic object.

The human operator typically holds or wears the haptic interface device and perceives audiovisual feedback from audio (computer speakers, headphones, and so on) and visual displays (a computer screen or head-mounted display, for example).

Audio and visual channels feature unidirectional information and energy flow (from the simulation engine towards the user) whereas, the haptic modality exchanges information and energy in two directions, from and toward the user. This bi directionality is often referred to as the single most important feature of the haptic interaction modality.

HAPTIC RENDERING

The actual process used by the software to perform its calculations is called **haptic rendering**."

a) Principle of haptic interface

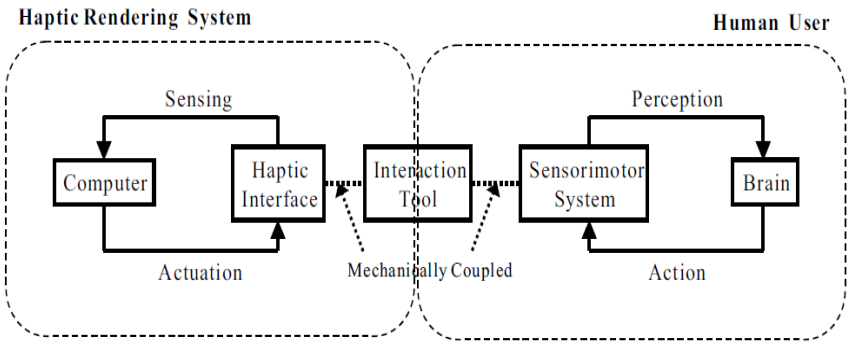

Figure : *Haptic interaction*

Haptic interaction occurs at an interaction tool of a haptic interface that mechanically couples two controlled dynamical systems: the haptic interface with a computer and the human user with a central nervous system. The two systems are exactly symmetrical in structure and information and they sense the environments, make decisions about control actions, and provide mechanical energies to the interaction tool through motions.

b) <u>Creation of an AVATAR</u>

An *avatar* is the virtual representation of the haptic through which the user physically interacts with the virtual environment. Clearly the choice of avatar depends on what's being simulated and on the haptic device's capabilities. The operator controls the avatar's position inside the virtual environment. Contact between the interface avatar and the virtual environment sets off action and reaction forces. The avatar's geometry and the type of contact it supports regulate these forces.

Within a given application the user might choose among different avatars. For example, a surgical tool can be treated as a volumetric object exchanging forces and positions with the user in a 6D space or as a pure point representing the tool's tip, exchanging forces and positions in a 3D space.

c) System architecture for haptic rendering

Haptic-rendering algorithms compute the correct interaction forces between the haptic interface representation inside the virtual environment and the virtual objects populating the environment. Moreover, haptic rendering algorithms ensure that the haptic device correctly renders such forces on the human operator. Several components compose typical haptic rendering algorithms.

The system architecture for haptic rendering is illustrated in the figure given below. We identify three main blocks in the figure.

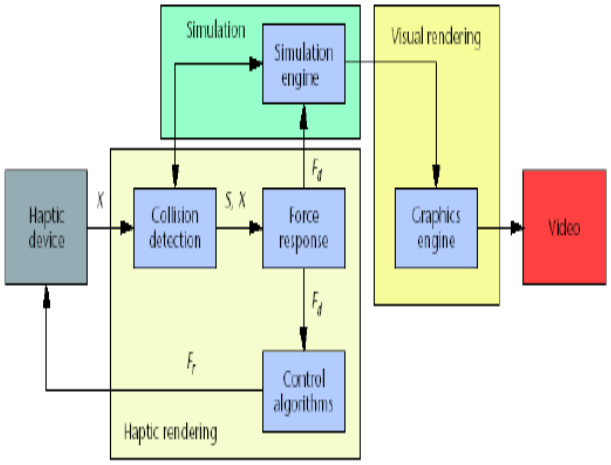

Figure 2.2 *Haptic rendering divided into three main blocks.*

S - contacts occurring between an avatar at position X and objects in the virtual environment

Fd - return the ideal interaction force between avatar and virtual objects.

Fr - Force to the user

Figure : ***Architecture of haptic rendering***

- ***Collision-detection*** algorithms detect collisions between objects and avatars avatar (virtual representation of the haptic interface through which the user physically interacts with the virtual environment) in the virtual environment and yield information about where, when, and ideally to what extent collisions (penetrations, indentations, contact area, and so on) have occurred.

- ***Force-response*** algorithms compute the interaction force between avatars and virtual objects when a collision is detected. This force approximates as closely as possible the contact forces that would normally arise during contact between real objects. Force-response algorithms typically operate on the avatars' positions, the positions of all objects in the virtual environment, and the collision state between avatars and virtual objects. Their return values are normally force and torque

  vectors that are applied at the device-body interface. Hardware limitations prevent haptic devices from applying the exact force computed by the force- response algorithms to the user.

- ***Control algorithms*** command the haptic device in such a way that minimizes the error between ideal and applicable forces. The discrete-time nature of the haptic-rendering algorithms often makes this difficult; as we explain further later in the

article. Desired force and torque vectors computed by force response algorithms feed the control algorithms. The algorithms' return values are the actual force and torque vectors that will be commanded to the haptic device.

The force response algorithm's return values are the actual force and torque vectors that will be commanded to the haptic device. Existing haptic rendering techniques are currently based upon two main principles: "point-interaction" or "ray-based".

In **point interactions**, a single point, usually the distal point of a probe, thimble or stylus employed for direct interaction with the user, is employed in the simulation of collisions. The point penetrates the virtual objects, and the depth of indentation is calculated between the current point and a point on the surface of the object. Forces are then generated according to physical models, such as spring stiffness or a spring-damper model.

In **ray-based rendering**, the user interface mechanism, for example, a probe, is modeled in the virtual environment as a finite ray. Orientation is thus taken into account, and collisions are determined between the simulated probe and virtual objects. Collision detection algorithms return the intersection point between the ray and the surface of the simulated object.

(d) Computing contact-response forces

Humans perceive contact with real objects through sensors (mechanoreceptors) located in their skin, joints, tendons, and muscles. We make a simple distinction between the information these two types of sensors can acquire.

- **Tactile information** refers to the information acquired through sensors in the skin with particular reference to the spatial distribution of pressure, or more generally, tractions, across the contact area. To handle flexible materials like fabric and paper, we sense the pressure variation across the fingertip. Tactile sensing is also the basis of complex perceptual tasks like medical palpation, where physicians locate hidden anatomical structures and evaluate tissue properties using their hands.

- **Kinesthetic information** refers to the information acquired through the sensors in the joints. Interaction forces are normally perceived through a combination of these two. To provide a haptic simulation experience, systems are designed to recreate the contact forces a user would perceive when touching a real object.

There are two types of forces:

1. Forces due to object geometry.
2. Forces due to object surface properties, such as texture and friction.

(1)<u>Geometry-dependent-force-rendering algorithms</u>:

The first type of force-rendering algorithms aspires to recreate the force interaction a user would feel when touching a frictionless and textureless object.

Force-rendering algorithms are also grouped by the number of Degrees-of-freedom (DOF) necessary to describe the interaction force being rendered.

(2)<u>Surface property-dependent force-rendering algorithms</u>:

All real surfaces contain tiny irregularities or indentations. Higher accuracy, however, sacrifices speed, a critical factor in real-time applications. Any choice of modeling technique must consider this tradeoff. Keeping this trade-off in mind, researchers have developed more accurate haptic-rendering algorithms for friction.

In computer graphics, texture mapping adds realism to computer-generated scenes by projecting a bitmap image onto surfaces being rendered. The same can be done haptically.

(e) Controlling forces delivered through haptic interfaces

Once such forces have been computed, they must be applied to the user. Limitations of haptic device technology, however, have sometimes made applying the force's exact value as computed by force-rendering algorithms impossible. They are as follows:

- Haptic interfaces can only exert forces with limited magnitude and not equally well in all directions.

- Haptic devices aren't ideal force transducers. An ideal haptic device would render zero impedance when simulating movement in free space, and any finite impedance when simulating contact with an object featuring such impedance characteristics. The friction, inertia, and backlash present in most haptic devices prevent them from meeting this ideal.

- A thi

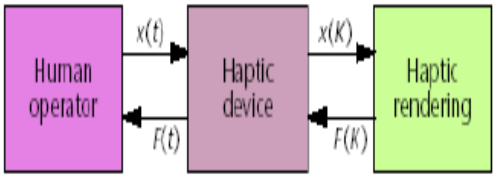

vhereas users

Figure 2.3 *Haptic devices create a closed loop between user and haptic rendering/ simulation algorithms. x(t) and F(t) are continuous-time position and force signals exchanged between user and haptic device. x(K) and F(K) are discrete-time position and force signals exchanged between haptic device and virtual environment.*

Figure :

Finally, haptic device position sensors have finite resolution. Consequently, attempting to determine where and when contact occurs always results in a quantization error. It can create stability problems. All of these issues can limit a haptic application's realism. High servo rates (or low servo rate periods) are a key issue for stable haptic interaction.

HAPTIC DEVICES

A haptic device is the one that provides a physical interface between the user and the virtual environment by means of a computer. This can be done through an input/output device that senses the body's movement, such as joystick or data glove. By using haptic devices, the user can not only feed information to the computer but can also receive information from the computer in the form of a felt sensation on some part of the body. This is referred to as a haptic interface.

Different types of haptic devices

1. LOGITECH WINGMAN FORCE FEEDBACK MOUSE

Figure 3.1 *Logitech mouse*

Figure :

It is attached to a base that replaces the mouse mat and contains the motors used to provide forces back to the user.

Interface use is to aid computer users who are blind or visually disabled or who are tactile/Kinesthetic learners by providing a slight resistance at the edges of windows and buttons so that the user can "feel" the Graphical User Interface (GUI). This technology can also provide resistance to textures in computer images, which enables computer users to "feel" pictures such as maps and drawings.

2. PHANTOM:

Figure : ***Phantom***

The PHANTOM provides single point, force- feedback to the user via a stylus (or thimble) attached to a moveable arm. The position of the stylus point/fingertip is tracked, and resistive force is applied to it when the device comes into 'contact' with the

virtual model, providing accurate, ground referenced force feedback. The physical working space is determined by the extent of the arm, and a number of models are available to suit different user requirements. The phantom system is controlled by three direct current (DC) motors that have sensors and encoders attached to them. The number of motors corresponds to the number of degrees of freedom a particular phantom system has, although most systems produced have 3 motors.

The encoders track the user's motion or position along the x, y and z coordinates the motors track the forces exerted on the user along the x, y and z-axis. From the motors there is a cable that connects to an aluminum linkage, which connects to a passive gimbals which attaches to the thimble or stylus. A gimbal is a device that permits a body freedom of motion in any direction or suspends it so that it will remain level at all times.

Used in surgical simulations and remote operation of robotics in hazardous environments.

3. Cyber Glove:

Cyber Glove can sense the position and movement of the fingers and wrist. The basic Cyber Glove system includes one CyberGlove, its instrumentation unit, serial cable to connect to your host computer, and an executable version of VirtualHand graphic hand model display and calibration software.

Figure : ***Cyber Glove***

The Cyber Glove has a software programmable switch and LED on the wristband to permit the system software developer to provide the Cyber Glove wearer with additional input/output capability.

With the appropriate software, it can be used to interact with systems using hand gestures, and when combined with a tracking device to determine the hand's position in space, it can be used to manipulate virtual objects.

APPLICATIONS

CURRENT APPLICATIONS

- **Medical training applications**:

Such training systems use the Phantom's force display capabilities to let medical trainees experience and learn the subtle and complex physical interactions needed to become skillful in their art.

Figure :

A computer based teaching tool has been developed using haptic technology to train veterinary students to examine the bovine

reproductive tract, simulating rectal palpation. The student receives touch feedback from a haptic device

while palpating virtual objects. The teacher can visualize the student's actions on a screen and give training and guidance.

- **Prostate Cancer:**

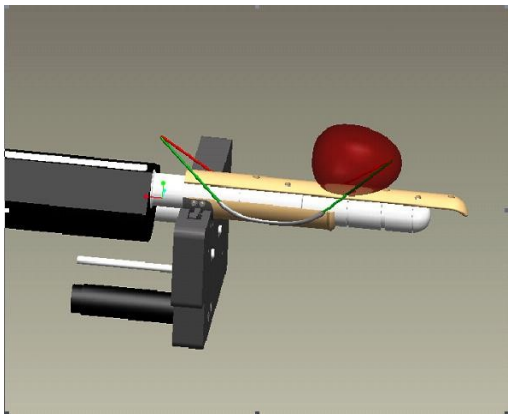

Figure : *Device used in brachytherapy*

Prostate cancer is the third leading cause of death among American men, resulting in approximately 31,000 deaths annually. A common treatment method is to insert needles into the prostate to distribute radioactive seeds, destroying the cancerous tissue. This procedure is known as brachytherapy.

The prostate itself and the surrounding organs are all soft tissue. Tissue deformation makes it difficult to distribute the seeds as planned. In our research we have developed a device to minimize this

deformation, improving brachytherapy by increasing the seed distribution accuracy.

- **Teleoperators and simulators**

Teleoperators are remote controlled robotic tools, and when contact forces are reproduced to the operator, it is called "haptic teleoperation". The first electrically actuated teleoperators were built in the 1950s at the Argonne National Laboratory in the United States, by Raymond Goertz, to remotely handle radioactive substances. Since then, the use of "force feedback" has become more widespread in all kinds of teleoperators such as underwater exploration devices controlled from a remote location. When such devices are simulated using a computer (as they are in operator training devices) it is useful to provide the force feedback that would be felt in actual operations. Since the objects being manipulated do not exist in a physical sense, the forces are generated using haptic (force generating) operator controls. Data representing touch sensations may be saved or played back using such haptic technologies. Haptic simulators are currently used in medical simulators and flight simulators for pilot training (2004).

- **Computer and video games**

Some simple haptic devices are common in the form of game controllers, in particular of joysticks and steering wheels. At first, such features and/or devices used to be optional components (like the Nintendo 64 controller's Rumble Pak). Now many of

the newer generation console controllers and some joysticks feature built in devices (such as Sony's DualShock technology). An example of this feature is the simulated automobile steering wheels that are programmed to provide a "feel" of the road. As the user makes a turn or accelerates, the steering wheel responds by resisting turns or slipping out of control. Another concept of force feedback is that of the ability to change the temperature of the controlling device. This would prove especially efficient for prolonged usage of the device. However, due to the high cost of such a technology and the power drainage it

would cause, the closest many manufacturers have come to realizing this concept has been to install air holes or small fans into the device to provide the user's hands with ventilation while operating the device.

In 2007, Novint released the Falcon, the first consumer 3D touch device with high resolution three-dimensional force feedback, allowing the haptic simulation of objects, textures, recoil, momentum, physical presence of objects in games.

- **Mobile consumer technologies**

Tactile haptic feedback is becoming common in cellular devices. Handset manufacturers like LG and Motorola are including different types of haptic technologies in their devices. In most cases this takes the form of vibration response to touch.

Alpine Electronics uses a haptic feedback technology named PulseTouch on many of their touch-screen car navigation and stereo units. The Google Nexus One features "haptic feedback" according to their specifications.

Samsung has made a phone, which vibrates, differently for different callers. Motorola too has made haptic phones

- **Cars:**

For the past two model years, the BMW 7 series has contained the iDrive (based on Immersion Corp's technology), which uses a small wheel on the console to give haptic feedback so the driver can control the peripherals like stereo, heating, navigation system etc. through menus on a video screen.

The firm introduced haptic technology for the X-by-Wire system and was showcased at the Alps Show 2005 in Tokyo. The system consisted of a "cockpit" with steering, a gearshift lever and pedals that embed haptic technology, and a remote-control car. Visitors could control a remote control car by operating the steering, gearshift lever and pedals in the cockpit seeing the screen in front of the cockpit, which is projected via a camera equipped on the remote control car.

- **Arts and design**

Touching is not limited to a feeling, but it allows interactivity in real-time with virtual objects. Thus, haptics are commonly used in virtual arts, such as sound synthesis or graphic design/animation. The haptic device allows the artist to have direct contact with a virtual instrument that produces real-time sound or images. For instance, the simulation of a violin string produces real-time vibrations of this string under the pressure and expressiveness of the bow (haptic device) held by the artist. This can be done with physical modelling synthesis.

Designers and modellers may use high-degree of freedom input devices that give touch feedback relating to the "surface" they are sculpting or creating, allowing faster and more natural workflow than with traditional methods.

- **Robotics**

The Shadow Dextrous Robot Hand [SDRH] uses the sense of touch, pressure, and position to reproduce the human grip in all its strength, delicacy, and complexity. The SDRH was first developed by Richard Greenhill and his team of

engineers in Islington, London, as part of The Shadow Project, (now known as the Shadow Robot Company) an ongoing research and development program whose goal is to complete the first convincing humanoid.

An early prototype can be seen in NASA's collection of humanoid robots, or robonauts. The Dextrous Hand has haptic sensors embedded in every joint and finger pad, which relay information to a central computer for processing and analysis. Carnegie

Mellon University in Pennsylvania and Bielefeld University in Germany in particular have found The Dextrous Hand is an invaluable tool in progressing our understanding of haptic awareness and are currently involved (2006) in research with wide ranging implications. The first PHANTOM, which allows one in the human world to interact with objects in virtual reality through touch, was developed by Thomas Massie, while a student of Ken Salisbury at M.I.T.

- **Virtual reality**

Haptics are gaining widespread acceptance as a key part of virtual reality systems, adding the sense of touch to previously visual-only solutions. Most of these solutions use stylus-based haptic rendering, where the user interfaces to the virtual world via a tool or stylus, giving a form of interaction that is computationally realistic on today's hardware. Systems are also being developed to use haptic interfaces for 3D modeling and design that are intended to give artists a virtual experience of real interactive modeling. Researchers from the University of Tokyo have developed 3D holograms that can be "touched" through haptic feedback using "acoustic radiation" to create a pressure sensation on a user's hands. The researchers, led by Hiroyuki Shinoda, currently have the technology on display at SIGGRAPH 2009 in New Orleans.

- **Actuators**

Haptics is enabled by actuators that apply the forces to the skin for touch feedback. The actuator provides mechanical motion in response to an electrical stimulus. Most early designs of haptic feedback use electromagnetic technologies such as vibratory motors with an offset mass, such as the pager motor, that is in most cell phones or voice coils where a central mass or output is moved by a magnetic field. The electromagnetic

motors typically operate at resonance and provide strong feedback, but have limited range of sensations. Next-generation actuator technologies are beginning to emerge, offering a wider range of effects thanks to more rapid response times. Next generation haptic actuator technologies include Electroactive Polymers, Piezoelectric, and Electrostatic surface actuation.

- **Graphical user interfaces**

Video game makers have been early adopters of passive haptics, which takes advantage of vibrating joysticks, controllers and steering wheels to reinforce on-screen activity. But future video games will enable players to feel and manipulate virtual solids, fluids, tools and avatars. The Novint Falcon haptics controller is already making this promise a reality. The 3-D force feedback controller allows you to tell the difference between a pistol report and a shotgun blast, or to feel the resistance of a longbow's string as you pull back an arrow.

Figure : *Haptic technology used in GUI*

Graphical user interfaces, like those that define Windows and Mac operating environments, will also benefit greatly from haptic interactions. Imagine being able to feel graphic buttons and receive force feedback as you depress a button. Some touch screen manufacturers are already experimenting with this technology. Nokia phone designers have perfected a tactile touch screen that makes on-screen buttons behave as if they were real buttons. When a user presses the button, he or she feels movement in and movement out. He also hears an audible click. Nokia engineers accomplished this by placing two small piezoelectric sensor pads under the screen and designing the screen so it could move slightly when pressed. Everything, movement and sound is synchronized perfectly to simulate real button manipulation.

FUTURE APPLICATIONS

Future applications of haptic technology cover a wide spectrum of human interaction with technology. Some current research focuses on the mastery of tactile interaction with holograms and distant objects, which, if successful may result in applications and advancements in gaming, movies, manufacturing, medical, and other industries. The medical industry will also gain from virtual and telepresence surgeries, providing new options for medical care. Some speculate the clothing retail industry could gain from haptic technology in ways such as being able to "feel" the texture of clothes for sale on the internet. Future advancements in haptic technology may even

create new industries that were not feasible or realistic before the advancements happening right now.

- **Holographic interaction**

Researchers at the University of Tokyo are currently working on adding haptic feedback to holographic projections. The feedback allows the user to interact with a hologram and receive tactile response as if the holographic object were real. The research uses ultrasound waves to create a phenomenon called acoustic radiation pressure, which provides tactile feedback as users interact with the holographic object. The haptic technology does not affect the hologram, or the interaction with it, only the tactile response that the user perceives. The researchers posted a video displaying what they call the "Airborne Ultrasound Tactile Display." The technology is not yet ready for mass production or mainstream application in industries, but it is quickly progressing, and "industrial companies" are already showing a positive response to the technology. It is important to note that this example of possible future application is the first in which

the user does not have to be outfitted with a special glove or use a special control, they can "just walk up and use [it] " which paints a promising picture for future applications.

- **Medical Applications**

One currently developing medical innovation is a central workstation surgeons would use to perform operations remotely—local nursing staff would set up the machine and prepare the patient. Rather than travel to an operating room, the surgeon becomes a telepresence. This allows expert surgeons to operate from across the country, increasing availability of expert medical care. Haptic technology will provide tactile and resistance feedback to the surgeon as he operates the robotic device. The goal is that, as the surgeon, for instance, makes an incision, he feels ligaments as he would if working directly on the patient.

Surgical training is also on the brink of benefiting from haptic technology. Researchers at Stanford are currently developing technology to simulate surgery for training purposes. Simulated operations would let surgeons and surgical students practice and train more. Haptic technology will aid in the simulation by creating a realistic environment of touch. Much like the telepresence surgery, surgeons will feel simulated ligaments or the pressure of a virtual incision as if it were real. The researchers led by J. Kenneth Salisbury Jr., a research professor of both computer science and surgery, are also hoping to eventually be able to create realistic internal organs for the simulated surgeries, but, as Salisbury has said, that is not an easy feat. The idea behind the research is that "just as commercial pilots train in flight simulators before they're unleashed on real passengers, surgeons will be able to practice their first incisions without actually cutting anyone."

FUTURE ENHANCEMENTS

- **Force Feedback Provided In Web Pages**:

This underlying technology automatically assigns "generic touch sensations" to common Web page objects, such as hyperlinks, buttons, and menus.

- **Brailee Display:**

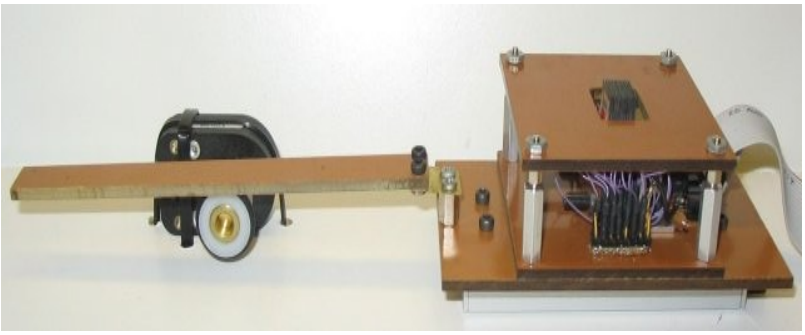

Figure : *Brailee Display*

The Virtual Braille Display (VBD) project was created to investigate the possibility of using the lateral skin stretch technology of the STRESS tactile display for Braille. The project was initially conducted at VisuAide inc. and is now being continued in McGill's Haptics Laboratory.

- **Haptic torch for the blind**:

Figure 5.1 Haptic torch

Figure :

The device, housed in a torch, detects the distance to objects, while a turning dial on which the user puts his thumb indicates the changing distance to an object. The pictured device was tested and found to be a useful tool.

ADVANTAGES

- Communication is centered through touch and the digital world can behave like the real world.

- Working time is reduced since objects can be captured, manipulated, modified and rescaled digitally.

- Surgeons can practice digitally, gaining confidence in the procedure before working on breathing patients.

- With haptic hardware and software, the designer can maneuver the part and feel the result, as if he/she were handling the physical object.

DISADVANTAGES

- The precision of touch requires a lot of advance design. With only a sense of touch, haptic interfaces cannot deliver warnings.

- Haptics applications can be extremely complex, requiring highly specialized hardware and considerable processing power.

- The complexity also means that many haptics projects rely on fixed installations of equipment.

- Debugging issues—these are complicated.

- As the objects being manipulated in haptics are virtual, a compelling interaction with the device requires that all of the physical properties and forces involved be programmed into the application. As a result, costs for haptics projects can be considerable.

CONCLUSION

Haptic is the future for online computing and e-commerce, it will enhance the shopper experience and help online shopper to feel the merchandise without leave their home. Because of the increasing applications of haptics, the cost of the haptic devices will drop in future. This will be one of the major reasons for commercializing haptics.

With many new haptic devices being sold to industrial companies, haptics will soon be a part of a person's normal computer interaction. This emerging technology promises to have wide reaching applications. In some fields, it already has .For example, haptic technology has made it possible to investigate to how the human sense of touch works, by allowing the creation of carefully controlled haptic virtual objects and hence they are used to probe human haptic capabilities.

1

2

0

1

2

3

REFERENCE