Major Project Report on

Mobile Number Portability

By

Shreshth Sabherwal Regd No 200614047

In partial fulfillment of requirements for the award of the degree

Bachelor of Technology (Information Technology)
(2010)

Under the guidance of

Mr. Ashis Datta
Lecturer, IT Dept.
SMIT

Mr. Rajeev Sharma
Technical Head, Switch Dept
Bharti Airtel Ltd.

DEPARTMENT OF INFORMATION TECHNOLOGY
SIKKIM MANIPAL INSTITUTE OF TECHNOLOGY
MAJITAR, RANGPO, EAST SIKKIM – 737136

Sikkim Manipal Institute of Technology

(A Constituent College of Sikkim Manipal University of Health, Medical & Technological Sciences)

Department of Information Technology

CERTIFICATE

This is to certify that Ms/Mr Shreshth Sabherwal (Regd. No. 200614047) student of Bachelor of Technology, VIII Semester, Department of Information Technology of Sikkim Manipal Institute of Technology, have pursued the project titled "Mobile Number Portability" under the guidance and supervision of Mr. Ashis Datta and the report has been submitted in partial fulfillment of requirements for the award of the degree, Bachelor of Technology in Information Technology by Sikkim Manipal University of Health, Medical & Technological Sciences in the Year 2010.

Name of the Guide (*Internal*)	**Head of the Department**
Mr. Ashis Datta	**Dr. Subrata Ghoshal**
Designation: Lecturer, IT Dept	**Date: 06.06.2010**
Date: 06.06.2010	

ACKNOWLEDGEMENT

Any work will be incomplete without guidelines, help and motivation. This task would also be too without extending our gratitude to all individuals who made us walk through that gate.

This project was developed under the guidance of **Mr. Rajeev Sharma (Technical Head, Bharti Airtel Ltd)**. Working under him has been an extremely fruitful and exciting experience. I have absorbed and imbibed a lot during this period of time. This will without a doubt be beneficial in providing a head start towards building a successful career.

I would like to express my sincere thanks to **Mr. Ashis Datta (Lecturer, IT Department, SMIT)** for his support and assistance throughout my project work.

I am also extremely indebted to **Ms. Shalini Singh (Senior Specialist, Design & Planning, Ericsson)** and **Mr. Uday Shekhar (Bharti Airtel Ltd.)** for providing us with the skill and knowledge without which this project would have been incomplete within the stipulated time.

Finally, I would like to thank the faculty members of **Information Technology Department** of Sikkim Manipal Institute of Technology for their constant source of inspiration and guidance.

Shreshth Sabherwal
Date: 06/06/2010

DOCUMENT CONTROL SHEET

1	Report No.	*IT/MAJOR PROJECT/AD/200614047/2010*
2.	Title of the Report	Mobile Number Portability
3.	Type of Report	Research Based
4.	Author(s)	Shreshth Sabherwal
5.	Organizing Unit	Bharti Airtel Ltd
6.	Language of Document	English
7	Abstract	MNP can be basically termed as "A customer having the option of switching service providers without changing the mobile number." This network functionality satisfies the customers and promotes healthy competition between service providers.
8.	Security Classification	Restricted
9.	Distribution Statement	Restricted

ABSTRACT

In Indian cellular communication scenario, the term MNP is becoming more popular. Sticking to Herbert Spencer's theory on "Survival of the fittest", the mobile operators will be forced to follow this theory in serving the customers. Either they have to satisfy their customers with the service or lose them to their competitors without any problem to the customers. It could also be termed as, **"A customer having the option of switching service providers without changing the mobile number."**

With the current scenario, if a customer is dissatisfied on the service by mobile operator either he has to reluctantly accept the service or switch to another service provider that he wishes. In the later case, he has to drop his identity, the mobile number.

In most cases when the mobile number is used for all business and family correspondence, it becomes generally impossible to leave the number. To overcome these hardships, the concept of **MNP (Mobile Number Portability)** was introduced. In India, this service is expected to be **operational by the mid of 2010**.

The DoT (Department of Telecom) has issued license to two global companies to implement the feature in two zones. **Telecordia**, the world's leading provider of MNP services has solutions deployed across nine countries including the US, Canada, Egypt, Greece and South Africa has been issued with license for implementing MNP in north and west zone in India. **Syniverse technologies**, also a major player in voice and data solutions has been issued with license for south and east zones. They will provide a **"central clearing house"** model for MNP in India.

I was working as a part of the Development team involved in Design and Planning (Phase 1) of this Telecom project with Ericsson India and Integration (Mobile Services) which will be provided by Bharti Airtel Ltd.

TABLE OF CONTENTS

LIST OF FIGURES

1. INTRODUCTION

1.1 General Overview of the problem:

Mobile number portability (MNP) requires that mobile telephone customers can keep their telephone number–including the prefix–when switching from one provider of mobile telecommunications services to another.

Number portability implementation removes barriers to competition between operators and services and ensures a dynamic, fully competitive market. The two constituencies that will benefit most from the introduction of number portability in India will be the subscribers, and operators who price competitively and provide quality service.

In the absence of MNP, customers have to give up their number and must adopt a new one when they switch operators. As a result, customers face switching costs associated with informing people about changing their number, printing new business cards, missing valuable calls from people that do not have the new number, etc. Thus, the customer may be unable to take full advantage of the growing competition among operators or the introduction of new services and technologies.

Based on these considerations, many regulatory authorities have imposed mandatory MNP so as to reduce customers switching costs, attempting to make mobile telecommunications more competitive.

Mobile Number portability eliminates these hurdles, and subscriber benefits may be categorized as:

Type 1 benefits accrue to subscribers who retain their telephone number when switching an operator, and include cost savings from having to change mobile number. Such subscribers are able to avoid the costs of reprinting stationary, informing callers, changing signs and lost business.

Type 2 benefits are those that arise out of efficiency and service quality improvements and any associated price reductions resulting from increased competition.

Type 3 benefits are those that accrue to callers to porting users who are able to avoid the need to change entries in their diaries, directories, databases and abbreviated diallers. They would also dial fewer wrong numbers and make fewer directory inquiries.

Introducing number portability will allow some of subscribers to shift between operators and could improve subscriber satisfaction once it is introduced. Operators who provide the best quality of service and coverage, and highest ‘value-for-money’ will benefit because consumers will prefer to begin service with them and will no longer hesitate because of changing phone numbers.

1.2 Development Schedule:

1.2.1 Milestones and Timelines:

STAGES	Milestone Name	Milestone Description	Timeline Week no.
A	Understanding the Existing System	Detailed study of the current system which included GSM concepts and pre MNP call flow routing.	1-3
B	Technology familiarization	Understanding of the new technology once the porting process (MNP) comes into place needed to implement the project.	4-6
C	High-level and Detailed Design	Listing down all possible scenarios post MNP (like node details and changes in call flow routes once these nodes are activated.) which have been designed via block diagrams and flow chart.	6-10
D	Implementation Details	Implementation of the porting process involved activation of signalling links by coding through an Ericsson based tool called WINFIOL. It also includes algorithms for each code done for every node tested for easy understanding.	10-13
E	Unit Testing	The testing was conducted on Dummy numbers for 3 scenarios to see the Porting Activation status of Airtel with other service providers.	14-16

1.2.2 Gantt Chart:

The milestones have been represented through a Gantt chart for proper understanding of the phases:

#	Task name	Start date	Duratio
1	Understanding the Existing System	11-01-2010	14
2	Technology familiarization	29-01-2010	14
3	High-level and Detailed Design	18-02-2010	21
4	Implementation Details	19-03-2010	20
5	Unit Testing	16-04-2010	17.5

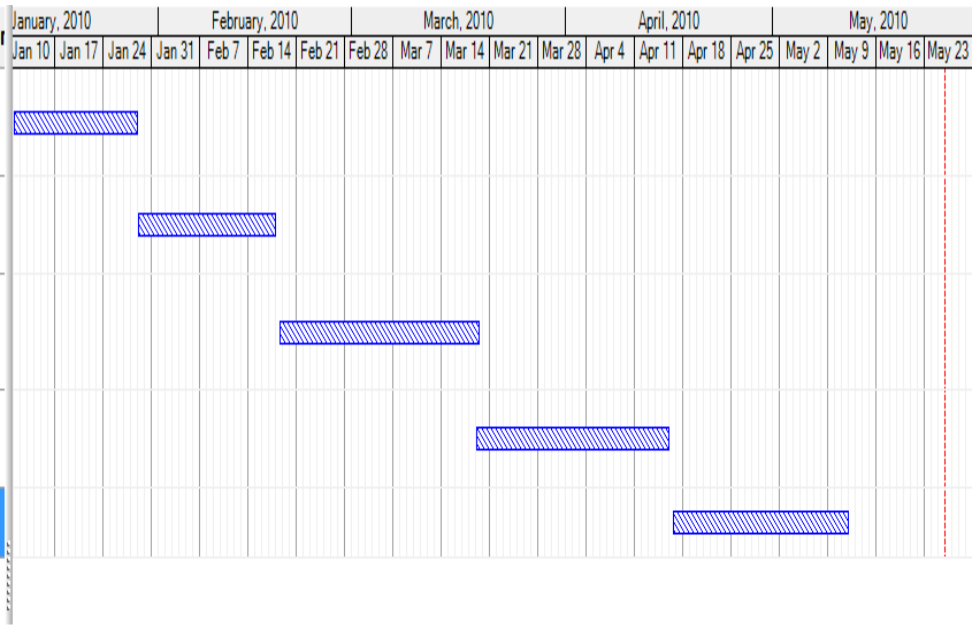

1.3 Literature Survey:

1.3.1 GSM

The **Global System for Mobile communications** is a digital cellular communications system. It was developed in order to create a common European mobile telephone standard but it has been rapidly accepted worldwide. GSM was designed to be compatible with ISDN services.

The GSM network can be divided into four main parts:

- The Mobile Station (MS).
- The Base Station Subsystem (BSS).
- The Network and Switching Subsystem (NSS).
- The Operation and Support Subsystem (OSS).

1.3.1.1 Mobile Station

A Mobile Station consists of two main elements:

- The mobile equipment or terminal.
- The Subscriber Identity Module (SIM).

1.3.1.1.1 The Terminal

There are different types of terminals distinguished principally by their power and application:

- The `fixed' terminals are the ones installed in cars. Their maximum allowed output power is 20 W.
- The GSM portable terminals can also be installed in vehicles. Their maximum allowed output power is 8W.
- The handheld terminals used in cell phones can emit up to 2 W. The evolution of technologies allows decreasing the maximum allowed power to 0.8 W.

1.3.1.1.2 The SIM

The SIM is a smart card that identifies the terminal. The SIM card is protected by a four-digit Personal Identification Number (PIN). In order to identify the subscriber to the system, the SIM card contains some parameters of the user such as its International Mobile Subscriber Identity (IMSI).

1.3.1.2 The Base Station Subsystem

The BSS connects the Mobile Station and the NSS. It is in charge of the transmission and reception. The BSS can be divided into two parts:

- The Base Transceiver Station (BTS) or Base Station.
- The Base Station Controller (BSC).

1.3.1.2.1 The Base Transceiver Station

The BTS corresponds to the transceivers and antennas used in each cell of the network. A BTS is usually placed in the centre of a cell. Its transmitting power defines the size of a cell.

1.3.1.2.2 The Base Station Controller

The BSC controls a group of BTS and manages their radio resources. A BSC is principally in charge of handovers, frequency hopping and control of the radio frequency power levels of the BTS's.

1.3.1.3 The Network and Switching Subsystem

Its main role is to manage the communications between the mobile users and other users, such as mobile users, ISDN users, fixed telephony users, etc. It also includes data bases needed in order to store information about the subscribers and to manage their mobility.

1.3.1.3.1 The Mobile services Switching Centre (MSC)

It is the central component of the NSS. The MSC performs the switching functions of the network. It also provides connection to other networks.

1.3.1.3.2 The Gateway Mobile services Switching Centre (GMSC)

A gateway is a node interconnecting two networks. The GMSC is the interface between the mobile cellular network and the PSTN. It is in charge of routing calls from the fixed network towards a GSM user. The GMSC is often implemented in the same machines as the MSC.

1.3.1.3.3 Home Location Register (HLR)

The HLR is considered as a very important database that stores information of the subscribers belonging to the covering area of a MSC. It also stores the current location of these subscribers and the services to which they have access.

1.3.1.3.4 Visitor Location Register (VLR)

The VLR contains information from a subscriber's HLR necessary in order to provide the subscribed services to visiting users. When a subscriber enters the covering area of a new MSC, the VLR associated to this MSC will request information about the new subscriber to its corresponding HLR. The VLR is always implemented together with a MSC; so the area under control of the MSC is also the area under control of the VLR.

1.3.1.3.5 The Authentication Centre (AuC)

The AuC register is used for security purposes. It provides the parameters needed for authentication and encryption functions. These parameters help to verify the user's identity.

1.3.1.3.6 The Equipment Identity Register (EIR)

The EIR is also used for security purposes. It is a register containing information about the mobile equipments. More particularly, it contains a list of all valid terminals.

1.3.1.4 The Operation and Support Subsystem (OSS)

The OSS is connected to the different components of the NSS and to the BSC, in order to control and monitor the GSM system. It is also in charge of controlling the traffic load of the BSS.

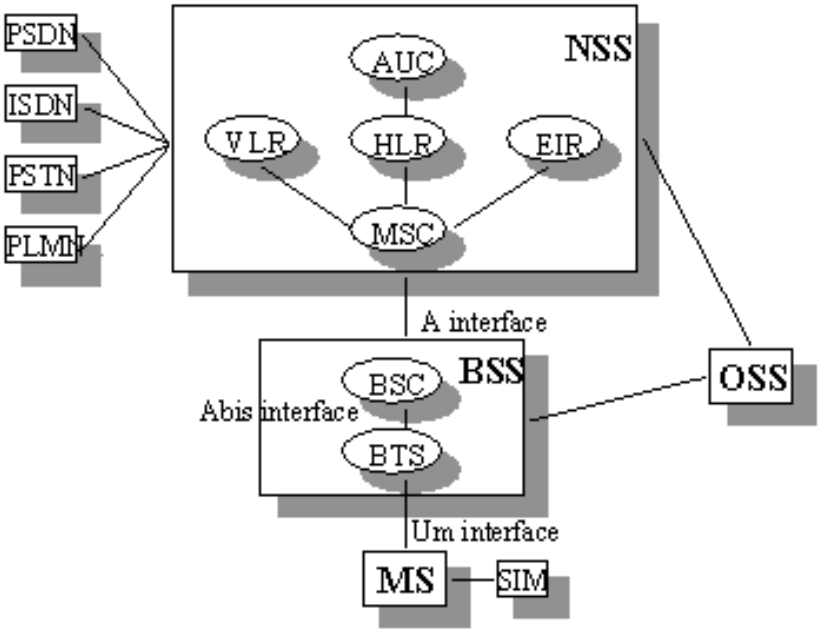

Fig 1.1: Architecture of the GSM network

1.3.2 GSM IDENTITIES

GSM must use more than one address and numbering plan to identify the different networks to which it can be connected. A mobile subscriber can make or receive calls from any location within the GSM service area.

In addition, the subscriber can forward calls and has a high security level within the system.

1.3.2.1 MOBILE STATION ISDN NUMBER (MSISDN):

The MSISDN is a number, which uniquely identifies a mobile telephone subscription in the PSTN numbering plan.

In **GSM 900/1800**, the MSISDN consists of the following:

MSISDN = CC + NDC + SN

CC- Country Code
NDC- National Destination Code
SN- Subscriber Number

In **GSM 1900**, the MSISDN consists of the following:

MSISDN = CC + NPA + SN
CC- Country Code
NPA- Number Planning Area
SN- Subscriber Number

The length of MSISDN depends on each operator's structure and numbering plan. The maximum length is 15 digits, prefixes not included. Each subscription is connected to one HLR.

1.3.2.2 MOBILE STATION ROAMING NUMBER (MSRN):

The HLR knows which MSC/VLR Service Area a subscriber is located in. When a call is made to a mobile subscriber, the HLR requests the current MSC/VLR to provide an MSRN as a temporary routing number for the subscriber that gets the call.
Upon reception of the MSRN, the HLR sends it to the GMSC that is now able to use this number to route the call to the MSC/VLR exchange where the subscriber that got the call is registered.
The MSRN consists of three parts:

MSRN = CC + NDC or NPA + SN
CC- Country Code
NDC- National Destination Code
NPA- Number Planning Area
SN- Subscriber Number

1.3.2.3 INTERNATIONAL MOBILE SUBSCRIBER IDENTITY (IMSI):

The IMSI is a unique identity allocated to each subscriber. It is used for the correct identification over the radio path and through the GSM PLMN network. All network-related subscriber information is connected to the IMSI. The IMSI is stored in the SIM, in the HLR, and VLR.

The IMSI consists of three parts:
IMSI= MCC + MNC + MSIN
MCC- Mobile Country Code
MNC- Mobile Network Code
MSIN- Mobile Station Identification Number

According to the GSM specifications, IMSI has a maximum length of 15 digits.

1.3.2.4 LOCATION AREA IDENTITY (LAI):

The LAI is used for paging, and tells the MSC which Location Area (LA) the MS is located in. It is also used for location updating of mobile subscribers.

The LAI comprises the following:

LAI= MCC + MNC + LAC

MCC: Mobile Country Code, the same as the IMSI MCC
MNC: Mobile Network Code, the same as the IMSI MNC
LAC: Location Area Code - the maximum length of the LAC is 16 bits, enabling 65,536 different location areas to be defined in one PLMN.

1.3.3 Terms Associated with MNP

1.3.3.1 Mobile number portability: It is ability for a mobile subscriber to change mobile network provider within the same portability circle while retaining their original mobile number. MNP is described in 3GPP Standards – TS 22.066 and TS 23.066 which needs to be followed for proper implementation of MNP. The portability information of subscribers resides in a separate database called NPDB. The network elements involved in call routing will query this database for routing information. The network elements involve in Differential Charging can query this database for portability status. Consequently NP could affect all functionality and services in mobile networks that are based on the MSISDN.

1.3.3.2 Donor Network: The network to which a subscriber belonged to before it was ported out of that network.

1.3.3.3 Recipient Network: The network to which a subscriber now belongs to once it was ported out from the donor network and ported in to this network.

1.3.3.4 Originating Network: The network in which the call is originating.

1.3.3.5 Home Subscriber: These are the subscribers which belong to the home number series. These subscribers are not currently ported-out; they might have been ported-out then ported-back-in, but in that case they would be considered as Home Subscriber.

1.3.3.6 Ported-in (Imported) Subscriber: These are the subscribers that have been ported into network from another network operator. These subscribers belong to other operator number series. These subscribers need to be defined in the Local NPDB with E.164 MSISDN and the Routing Number (RN) corresponding to the recipient network. Usually, the Ported-In subscribers are treated the same way as Home subscriber.

1.3.3.7 Ported out (Exported) Subscriber: These are the subscribers that have been ported out of network and now reside in another network. These subscribers belong to the donor network's number series. These subscribers need to be defined in the Local NPDB with E.164 MSISDN and the Routing Number (RN) corresponding to the recipient network. Usually, the Ported-out subscribers are treated the same way as Foreign/Other subscriber.

1.3.3.8 Foreign/Other Subscriber: Foreign subscriber is the subscriber who does not belong to the home network and can be ported between other networks. For example: if subscriber X is ported from network A to network C then it's in the category of foreign subscriber for network B. These subscribers might be defined in the Local NPDB in case where they have been ported-out of their original donor network.

1.3.3.9 Local Number Portability Data Base (NPDB): This is the database, operated by the network provider, where all ported numbers will be listed as well as number series belongings to Donor Networks. This database contains the Routing Number (RN) of the recipient networks and Donor networks. This database will be interrogated to properly route the call at each call termination towards a Mobile Number. This database can be interrogated by IN & VAS nodes to retrieve Portability Information in order to apply Differential Charging.

1.3.3.10 Routing number (RN) – Location Routing Number (LRN) is the data stored against the ported number in the number portability database. The RN or LRN points to a subscription network or recipient network. This number is assigned by the Indian Telecommunications Agency TRAI and DOT. The format for Routing Number is Numeric four digit code. It is now decided the codes will be in the range 1xxx to 4xxx.

1.3.3.11 Clearing House (CH) – Centralized Number Portability Data Base: This is the independent system which will control the porting process between mobile operators and that will hold the reference NPDB. This system will provide updates to the local NPDB of each network, requiring MNP information.

1.3.3.12 Portability Domain: This is the number series which are allowed to be ported from one operator to another operator. Currently in India, the portability domain only consists of Mobile Number Series.

1.3.3.13 Operator Gateway: The Operator Gateway connects to the Clearing House (CH) on north bound interface and to the Network Element Manager (NEM) on the south bound interface and synchronizes the Clearing house NPDB database to the local NPDB database. The operator gateway communicates to the Local NPDB via the Network Element Manager (NEM) for protocol conversion.

1.3.4 Call Routing Algorithm

One routing goal is to make the data transmission as efficient as possible. To reach this, the selecting of call routing algorithm is of important. The basic problem of call routing is to find the lowest-cost path between any two nodes in networks, where the cost of a path equals the sum of the costs of all the edges that make up the path.

Mobile calls routing is divided into two classes: **Network Routing** and **Message Routing**. The fundamental task of Network Routing is to deliver (route) message packets between different source-destination pairs. While not all source-destination are connected directly, Message Routing is needed. The source-destination pairs are also referred as user pairs. Routing process is generally multihop, e.g. packets traverse intermediate (relay) nodes to reach destination. Message routing is to find "best" sequence of links for message to traverse to reach final destination, the "best" way is defined by network, means that the shortest route, and the least congested route.

Routing algorithm perform Message Routing and make routing decisions to perform best route selection for various user pairs, and delivery of message to destination once routes selected. In packet-switch networks, decision made is for each individual packet. Routing algorithms are categorized as Static and Adaptive (Dynamic).

1.3.4.1 Static algorithm: Path fixed regardless of changes in network conditions.

1.3.4.2 Adaptive algorithm: Path modified in response to changes in network conditions.

Modern networks generally use Dynamic algorithm rather than Static algorithm. Distance Vector Routing and Link State Routing are the most popular Dynamic algorithms in particular.

1.4 Problem Definition:

Pre MNP implementation, in case of Mobile Originating calls for mobile-mobile calls within HPLMN the HLR query for routing information i.e. MSRN was done via the MSC. MSRNs are related to the geographical numbering plan, and not assigned to subscribers, nor are they visible to subscribers.

There was no querying for routing done with local NPDB of the various service providers neither with the centralised NPDB.

The existing system did not have the exclusive feature of portability in mobile numbers which left the customers at a disadvantage as they had to bear the switching costs whenever they were travelling places.

1.5 Analysis of the Problem:

1.5.1 Existing Call Routing System:

An incoming mobile terminating call is forwarded toward the Gateway MSC (GMSC) function. The GMSC is a switch which is able to interrogate the subscriber's HLR to obtain routing information, and thus contains a table linking MSISDNs to their corresponding HLR. A simplification is to have a GSMC handle one specific PLMN. The GMSC function is distinct from the MSC function, but is usually implemented in an MSC.

The routing information returned to the GMSC is the Mobile Station Roaming Number (MSRN), which is also defined by the E.164 numbering plan. MSRNs are related to the geographical numbering plan, and not assigned to subscribers, nor are they visible to subscribers.

The most general routing procedure begins with the GMSC querying the called subscriber's HLR for an MSRN. The HLR typically stores only the SS7 address of the subscriber's current VLR, and does not have the MSRN. Therefore the HLR must query the subscriber's current VLR, which will temporarily allocate an MSRN from its pool for the call. This MSRN is returned to the HLR and back to the GMSC, which can then route the call to the new MSC in where the called subscriber is being. At the new MSC, the International Mobile Subscriber Information (IMSI) corresponding to the MSRN is looked up, and the mobile is paged in its current location area.

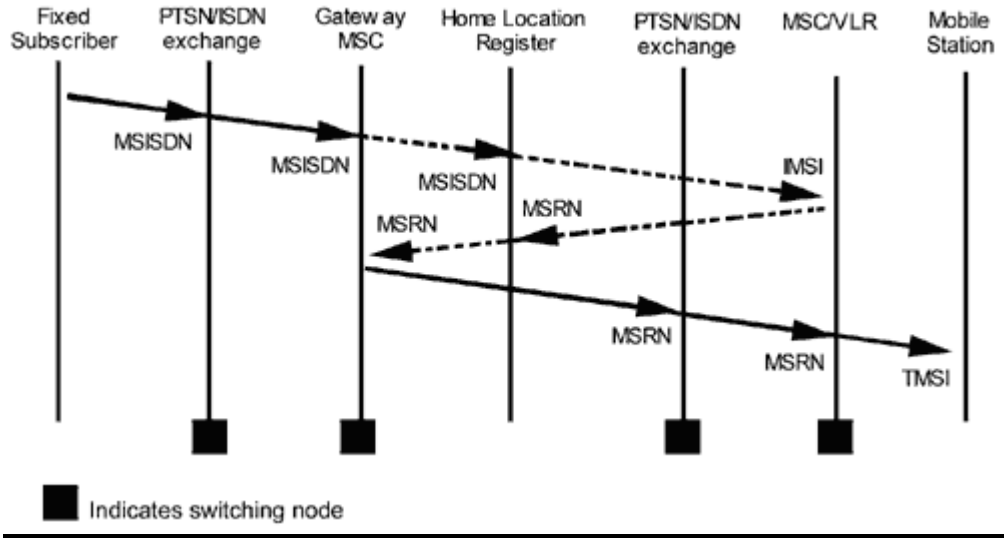

Fig 1.2: Pre MNP Call Routing System

1.5.2 Challenges Faced by the Existing Architecture:

The issues encountered are mentioned as under:

1.5.2.1 The existing architecture involves usability of Ericsson's FNR (Flexible Numbering Register) which is being currently used for signalling purposes. This system involved the following disadvantages :

1.5.2.1.1 Complexity of Hardware
1.5.2.1.2 High Set-up Costs
1.5.2.1.3 High Maintenance Costs
1.5.2.1.4 Low Database (Subscriber related information) carrying capacity

1.5.2.2 Due to absence of Portability concept in the existing system, the customers have to give up their number and must adopt a new one when they switch operators. As a result, customers face switching costs associated with informing people about changing their number.

1.6 SRS:

A **Software Requirements Specification** (**SRS**) is a complete description of the behaviour of the system to be developed.

The SRS contains supplementary requirements. These are requirements which impose constraints on the design or implementation (such as performance engineering requirements, quality standards, or design constraints).

1.6.1 Software Interface:

1.5.1.1 User: Windows 98/NT/XP/VISTA OS
1.5.1.2 Database Server: NPDB server (Telecordia and Syniverse Technologies)
1.5.1.3 Development End: WINFIOL (An Ericsson tool for linking Network elements)

1.6.2 Hardware Interface:

1.5.2.1 Processor: Pentium 4 or above
1.5.2.2 Signaling hardware for Tekelec: STP – Eagle and NPDB – E PAP
1.5.2.3 Disk Space: 500 GB (approx) data cards with each installed node

1.6.3 Lifecycle Model:

<u>Iterative Waterfall Model</u>

The life cycle model used for the development of this feature is Iterative Waterfall Model. The iterative waterfall model is used since this model is based on phases and the errors committed in a phase can be corrected even after going to the next phase since it is an iterative process. The requirement and assumption of each phase are not fixed and it is redefined in iterative way until the entire requirements are understood. The requirement can be easily understood using Iterative Waterfall model. The Iterative nature allows the new requirements, which were ignored or overlooked in previous phases, can be incorporated without considerable effort and changes. The main advantage of using this model is:
The user gets to experiment with the partially developed functionality much before the complete version of system is released.

1.6.3.1 Can implement the changes in the user's requirement in successive versions.

1.6.3.2 Reduce chances of error in module of final product.

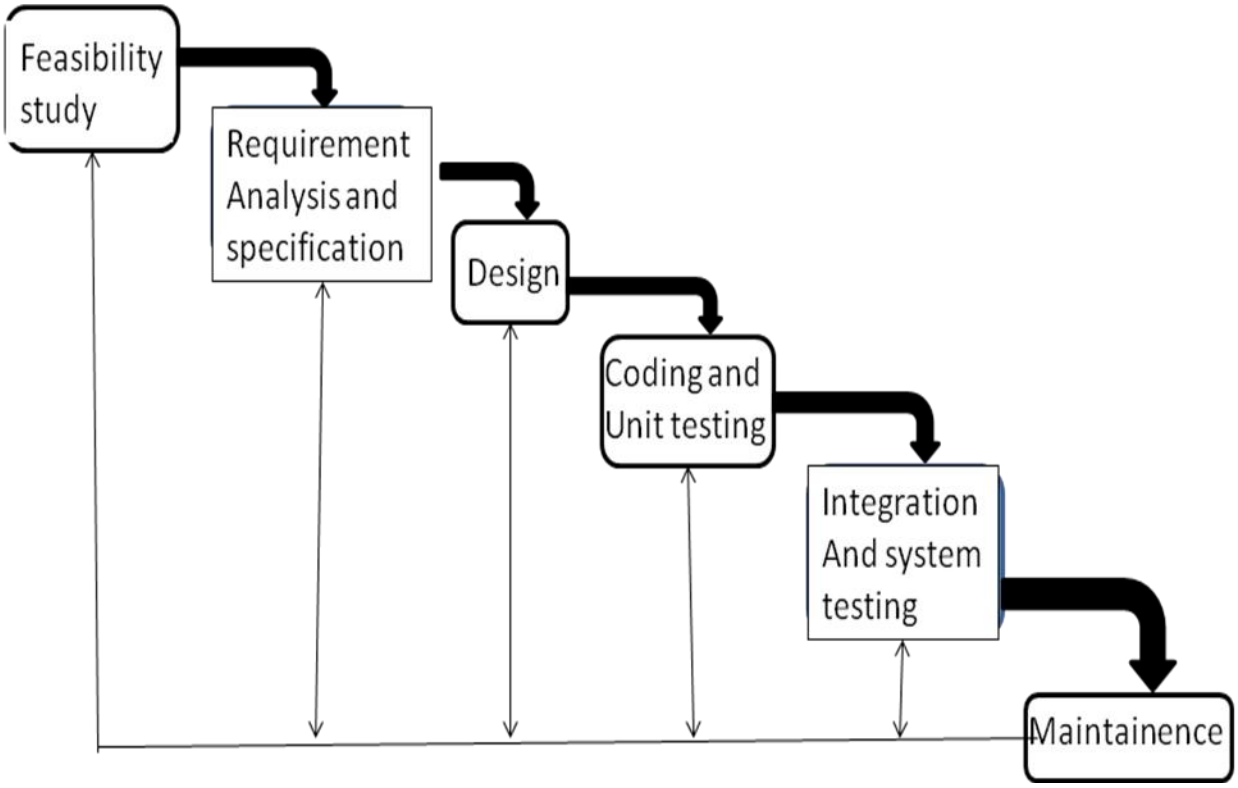

Fig 1.3: Iterative Lifecycle Model

1.7 Proposed Solution Strategy:

The solution to the limitations faced by the existing system can be overcome by inclusion of the concept of **Mobile Number Portability**.

1.7.1 Definition: Mobile Number Portability enables the mobile phone end-user to retain their mobile number without compromising on quality, reliability and operational convenience when they change their service provider in a service area. It requires the originating network to determine the correct destination for a given number and forward the call to the destination network.

1.7.2 Necessity of Number Portability:

1.7.2.1 Subscriber's View:

1.7.2.1.1 Better quality & bouquet of value-added services offered by any operator.
1.7.2.1.2 Competitive tariff package will be offered by all providers.
1.7.2.1.3 Survival of the most competent and promising providers in the market.

1.7.2.2 Mobile Service Provider's View:

1.7.2.2.1 Updated technology and sophistication prevent stagnation of up gradation.
1.7.2.2.2 Healthy competition between providers.

1.7.3 Requirements of Number Portability:

An effective MNP system requires a database having information of the networks and associated imported or exported numbers. In India, central as well as regional databases are being planned. Most countries have a centralized database service managed by a neutral third party. A centralized clearing house for electronically processing the importing / exporting requests also needs to be setup, to minimize the time to port (i.e. to transfer the numbers from one network to another).

1.7.4 Database Management:

The number database is managed by a **neutral third party**. The cost of the database is to be borne by each operator depending on the strength of their subscribers i.e. depending on their market share.

In India, **Syniverse technologies**, also a major player in voice and data solutions has been issued with license for Zone 1 (south and east zones) and **Telcordia Technologies**, formerly Bell Communications Research, Inc. has been granted a license by DoT to manage the portability clearing house for Zone 2 (north and west zones).

The various technical options related to the implementation of MNP mentioned above involve the use of databases that contain routing information. The databases can be centralized or distributed.

The **centralized model** involves a single reference database containing data for all mobile numbers or alternately, all ported numbers. This reference data is usually copied to operational databases in each participating network on a frequent basis. A consortium of network operators may manage this centralized number database for mobile number portability, or it may be out-sourced to a third party.

The **distributed model** involves multiple databases containing subsets of the total data. For example, in the on-switch case each separate database in the distributed model may comprise only the numbers ported from a particular mobile network operator. The full set of information about all mobile numbers (or all ported mobile numbers) is only available from these separate databases when taken as a whole.

1.7.5 Signalling Links to be used for Number Portability:

It has been decided to go on with Tekelec for its STP/NPDB vendor. 1 Pair of STP/NPDB will be deployed at Delhi in pair for redundancy purpose. Today there are 4 STPs in Delhi. These 4 Ericsson's STPs will be replaced by 2 Tekelec STP's.
One Tekelec STP will cater to the requirement of 2 existing STPs.

For Delhi circle, there will only be high speed links used to connect MSC/MSC-S with NPDB/STP. There is no low speed links connected to the current STPs from MSC/MSC-S.

1.7.6 Technical Solution:

The technical solution adopted for the implementation of number portability is important as it will have cost implications on service providers/network operators, and will affect the services offered and the performance of these services made available to the subscriber. Technical solutions may influence, or be influenced by, cost allocation arrangements and form an essential background to questions of cost assessment and recovery.

Deciding between different technical options requires us to consider a whole range of issues. These include roaming, operational support system modifications, call charging arrangements, routing arrangements in the National Numbering Plan, interconnection between networks, support of number portability within and across mobile technologies, the timeframes involved in the introduction of solutions, the cost-effectiveness of different solutions, handling of voicemail, data and fax numbers, and routing of SMS traffic in the case of MNP.

A key question that needs early resolution is the method used for routing of calls from an originating network to the recipient network. Number portability can be provided by two broad categories of methods: off-switch solutions or on-switch solutions.

1.7.6.1 Off-switch Solutions

Off-switch solutions transfer the knowledge of porting information into one or more external databases that all network switches can access for query. Interception is performed at the originating switch or at some transit switch. This type of solution allows for the efficient routing of the call towards the recipient switch.

The originating switch (or some transit switch) can intercept a call to a ported number by querying the database that contains the list of all ported numbers plus routing information associated with each ported number.

There could be two ways to access the database such as:

1.7.6.1.1 All-Call-Query method: The originating network first checks the location of the dialled number in the central database and then routes the call directly to the recipient network.

1.7.6.1.2 Query-on-Release: The originating network first checks the status of dialled number with the donor network. The donor network returns a message to the originating network identifying if the number has been ported or not. The originating network then queries the central database to obtain the information regarding the recipient network and routes the call directly to the recipient network.

1.7.6.2. On-switch Solutions

In the case of on-switch solutions, the donor network manages the routing information for a ported number. Thus, the donor switch performs the interception, either routing the call itself, or providing routing information to the originating network that then routes the call to the recipient network. Consequently, this involves the use of internal databases.

The two ways to implement on-switch solutions are:

1.7.6.2.1 Onward routing (call forwarding): Here, the originating network connects to the donor network. If the dialled number has been ported, the donor network itself routes the call to the recipient network.

1.7.6.2.2 Call Drop Back: Here the donor network checks if the number is ported and if it is, releases the call back to the originating network together with information identifying the correct recipient network. The originating network then routes the call to the recipient network.

On-switch solutions are usually seen as a short-term interim solution for number portability. They are relatively easy and quick to implement compared to off-switch solutions and in a timely way with minimum investment. Simultaneously, a long-term solution was also studied and deployed progressively.

1.7.7 Comparing the Technical Options

Onward routing is often regarded as the simplest routing method to implement and the all call query method as the most complex, with the other methods lying between these two extremes. This is also reflected in the costs of establishment, with onward routing regarded as cheaper to establish than the all call query method. By contrast, the ongoing costs associated with the all call query method are usually regarded as less than those of the onward routing method. Again, the costs associated with the other two methods lie between those of all call query and onward routing.

The centralized database solution is perceived as a long-term target solution for number portability. It supports optimal call routing and is adapted to an environment where all operators share number information. However, it is technically much more complicated to implement, involves significant investment (even from operators who are not directly concerned with number portability such as national long distance operators selected as indirect access providers), and requires considerable national co-ordination.

Alternatively, distributed database solutions might need less coordination because every operator will have to handle the information only of their ported out or ported in numbers.

1.7.8 Operational Aspects

Although the technical implementation of number portability involves particular challenges, the challenges in devising the administrative arrangements facilitating porting of numbers may need equal, if not more, attention. Inefficiently designed, complex or flawed procedures for porting of mobile numbers may act as a bottleneck to the successful implementation of portability and severely affect the expected benefits.

Designing efficient, simple, secure and yet practical porting procedures for number portability may involve addressing issues such as the role of retailers, the need to change SIM cards or handsets, existing customer obligations, authentication of customers requesting a port, communication arrangements between entities during the porting process, refusal to port, time to port, and procedures for porting large quantities of numbers at a given time. These issues can be addressed through a Consultation at a later stage.

1.7.9 Economic Aspects

The success of introduction of any service in a telecom network is highly dependent on how cost-effective it is to the end users, and the cost burden it imposes on the concerned parties for its implementation. In this respect, the implementation of number portability should be cost-effective to ensure its success.

1.7.10 Costs associated with Number Portability

The costs incurred in the provision of number portability may be broadly divided into three categories:

> **1.7.10.1 System set-up costs**: These costs ensure that all or most users have the capability to use number portability. These may be the costs of establishing/maintaining routing databases, conditioning existing networks, upgrading network switches, and modifying existing software. These are the costs that a provider may incur in establishing the

capacity to provide number portability on its own network and in its associated operational support and administration.

1.7.10.2 Call Conveyance costs: The costs of additional conveyance of calls to ported numbers in the case that they must transit the donor network.

1.7.10.3 Administration costs: These are customer transfer costs or porting costs. They include the costs incurred by service providers in closing an existing account, setting-up a new account and coordinating the network operators in the switching over of the mobile number and routing of the calls; costs of new handsets or SIM cards; and caller costs (the additional delay in setting up a call to a ported number).

1.7.11 Architecture suitable for Number Portability:

There are two basic implementation of MNP:

1.7.11.1 Indirect Routing or decentralized or bilateral architecture: This model works bilaterally between the donor and recipient service providers who are responsible for informing all others of the change. It would suit to markets with less number of service providers. Each provider will have a dedicated setup and comprehensive database of ported out and ported in subscribers. As the number of service providers increases, the bilateral approach becomes a great burden to all service providers involved in terms of time, cost and resources. FNR (Flexible Number Register) will help the service providers have the ported database in addition to the original HLR database.

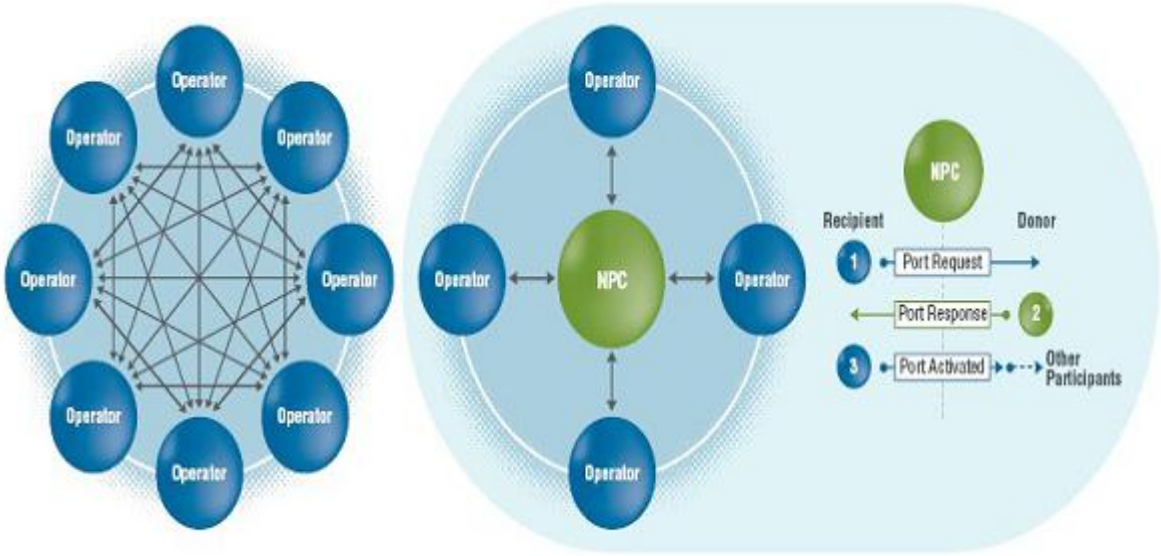

Fig 1.4: Bilateral or Decentralised Approach

Drawbacks with this type of routing:

1.7.11.1.1 Routing to the ported user is indirect and possibly costly, because additional transit charges, interconnect charges, and/or extra conveyance costs may be generated even when the originating provider is the same as the terminating recipient provider.

1.7.11.1.2 For the donor network, billing associated with ported and non-ported numbers cannot be differentiated easily.

1.7.11.1.3 If the donor network uses a small, non-high-performance database, increased call Setup time for ported numbers is inevitable.

1.7.11.1.4 Due to the dependence on the donor network, the receiving network cannot serve the ported user reliably, because it has no control over the quality of service on the donor network.

1.7.11.1.5 If the donor provider discontinues its operations or is experiencing a network failure, the ported subscribers cannot be reached even if they ported numbers years ago. This is a growing concern due to the increasing number of failures and the high cost to put these subscribers back in service.

1.7.11.2 Direct Routing or centralized architecture: In direct routing, the concept of CDB comes into picture. This central database or Central clearing house will handle all activities related to porting of subscribers between service providers. This model is suited for markets with several service providers and this model is currently used almost in all MNP implementations. Two options are available with this model with all the service providers updating the ported number database in synchronization with the CDB and the other is to query the CDB for all call interrogation to get proper routing procedure. After obtaining the rules, rest of the call is handled normally. Thus the complexity and risk is reduced to a minimum with the little increase in work for the service providers to make an additional check. This model is highly recommended for MNP implementation and the routing procedures can be discussed between the operators.

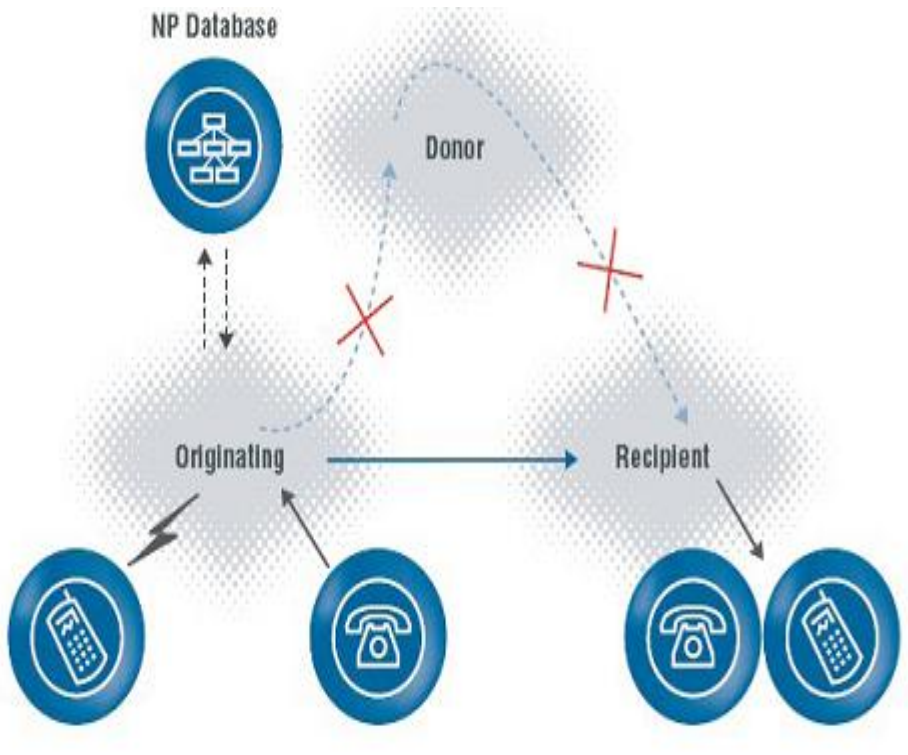

Fig 1.5: Direct or Centralised Approach

1.7.12 Final Solution for Call handling Post MNP:

All Call Query would be the method that would be used to handle calls after MNP is Implemented .All ported mobile numbers will be maintained in a "**Local Number Portability Database**". Every Access Provider will be assigned a code called "**Location Routing Number**". The MNP service provider will maintain a centralized database which would contain all the mobile numbers of the nation and their corresponding current Access Provider's location routing number. When a call is made, the dialler's network which has access to the MNP service provider's database will query the database to find the dialled number's Access provider. Based on the information the call is progressed further. This solution is an expensive one but the authority feels that in long Term it would be a stable one. The setup time of each call, whether the dialled number is ported or not is increased and would be inefficient in case the porting volume turns out to be too low.

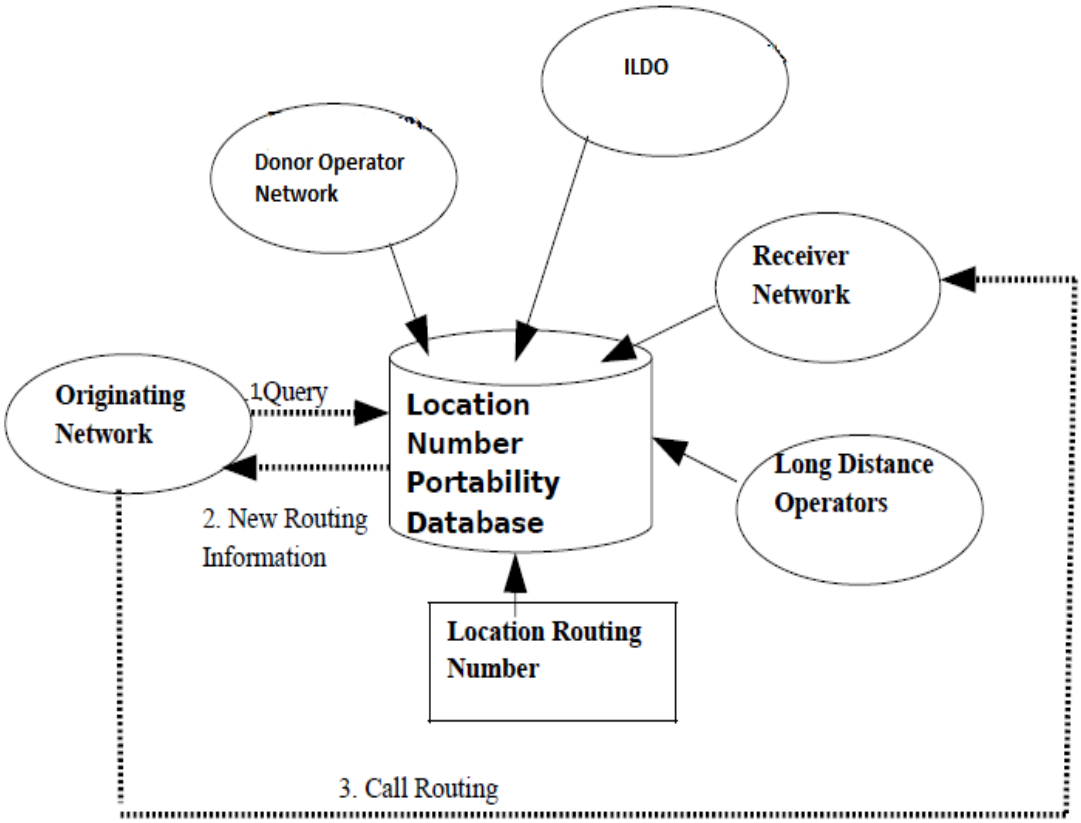

Fig 1.6: All Call Query Method

Every operator will need to have their own local MNP database which will update from the central database. This Local NPDB will have connectivity with operator's network for portability check. Most of the operators have decided to build NPDB functionality over STP & will work in redundancy.

All network elements which needs the ported information as per various call scenarios will interface with the NPDB over standard SS7 interface. MSCs, GSMCs, HLRs, CCN needs to be integrated with STP/NPDB for the new traffic scenarios i.e., to cater for MNP All Call Query and prepaid charging impacts of ported subscribers.

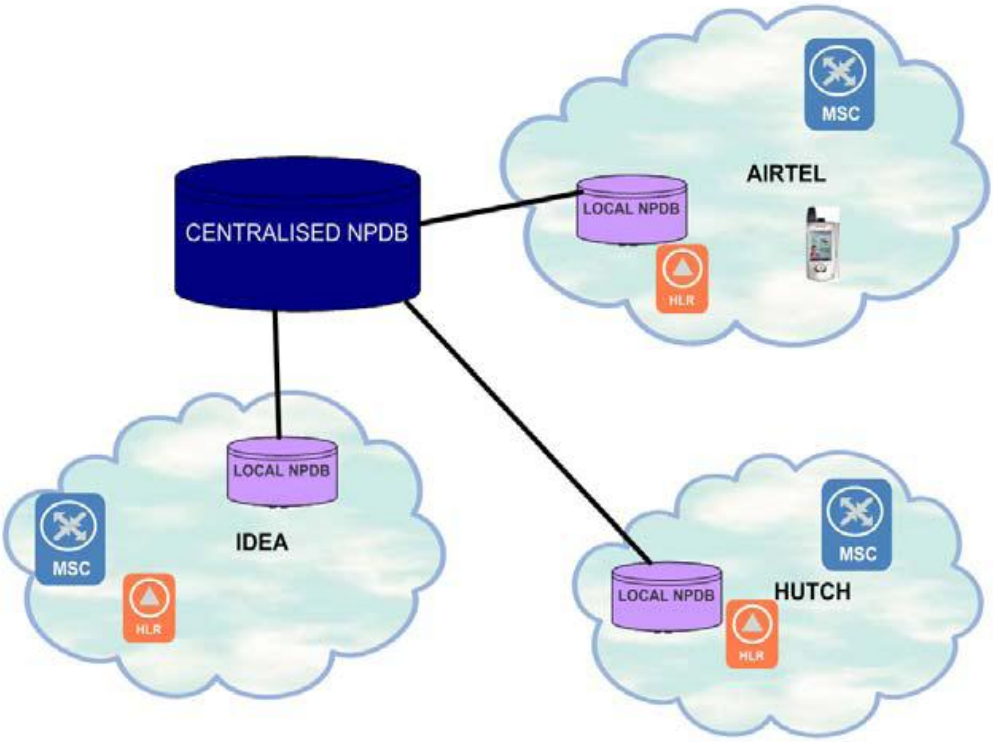

Fig 1.7: Proposed MNP provisioning structure

Post MNP, Any Bnumber that is a potential ported subscriber will have to be checked in the NPDB what the status is. If the subscriber is really ported in, the SRI request will be passed on to HLR. HLR will do a query towards terminating VLR with MAP PRN (provide roaming number). PRN ACK will come back to HLR with MSRN in international format. HLR will send SRI RESULT back to MSC with **MSRN in national format**.

In NPDB, only numbers that have been ported in or ported out will be defined. Subscribers who have not been ported in/out will not exist in the NPDB. The contents of NPDB is controlled from central point, so called clearing house which will push out the same subscriber data to all NPDB in India. This means that every NPDB will have the same content of subscribers.

There is a chance that there will be an inconsistency between different NPDB databases but that would be caused by abnormal cause of events in the data base updating process from clearing house to the local databases. This may cause calls to be distributed to the wrong network.

The way this is handled is that terminating network is not allowed to make NPDB queries. Terminating network will only do SRI request directly towards HLR. If the Bnumber does not exist in the HLR then the call will be released with normal cause code derived from SRI Result from HLR mapped in to cause codes in AXE.

For **exported subscribers**, the SRI sent from MSC towards HLR will be intercepted by NPDB as the number is found in the database as ported out.
NPDB will send SRI Result with **MSRN = RN+Bnumber concatenated in national format.**
MSC will receive SRI RESULT from either HLR or NPDB. In any case, MSC must route the call towards the destination.

For **incoming international calls**, there should be an NPDB lookup done by the first national gateway. After that the call can be dispatched to the correct network. In this case, same behavior applies for the terminating network no matter of the origin of the incoming call. GMSC will receive an IAM with MSRN=RN+B number for ported subscribers.

1.8 Preliminary User Manual:

1.8.1 Salient features of Portability for a Subscriber are as follows:

1.8.1.1 MNP facility shall be available only within a given licensed service area.

1.8.1.2 A subscriber holding a mobile number is eligible to make a porting request only after 90 days of the date of activation of his mobile connection. If a number is already ported once, the number can again be ported only after 90 days from the date of the previous porting.

1.8.1.3 The Subscriber who wishes to port his mobile number should approach the Recipient operator (the operator to whom the subscriber wants to port his number). The Subscriber may be required to pay porting charges, if any, to the Recipient Operator.

1.8.1.4 A **non-refundable fee**, not exceeding Rs. 19 is to be paid to the gaining provider for every porting transaction. This is due to the fact that the gaining provider has to complete more formalities than if they get a new subscription

1.8.1.5 The subscriber making the porting request is required to have cleared all the bills issued prior to the date of porting request. He shall give an undertaking that he has already paid all billed dues to the Donor Operator as on the date of the request for porting and that he shall pay dues to the Donor Operator pertaining to the mobile number till its eventual porting and that he understands and agrees that in event of non-payment of any such dues to the Donor Operator, the ported mobile number shall be liable to be disconnected by the Recipient Operator.

1.8.1.6 A subscriber may withdraw his porting request within 24 hours of its submission to the Recipient Operator. However, the porting charges shall not be refundable.

1.8.1.7 The regulation envisage a maximum time period of four days for the completion of porting process.

1.8.1.8 Access Providers are required to implement All Call Query method.

1.8.1.9 The Originating operator shall be responsible to route the call to correct terminating network.

1.9 Organisation of the Report:

The report is organized according to different implementation phases and concepts of Mobile Number Portability mentioned under various chapters.

At the beginning, there is a short **Abstract** about the project followed by a brief **Introduction** on MNP which includes a gist of what it is all about.

Next up is **Development Schedule** which gives us a pictorial representation of the duration to complete various phases of the project.

Next follows the **Design strategy** which includes a detailed stepwise approach by comparing pre and post MNP scenarios and changes made in the routing of calls. This is done with the help of various architectural diagrams and figures. It also boasts about porting process which has been explained via Flow chart.

The **Testing phase** includes the testing results conducted on Dummy mobile numbers for specifically 3 cases namely SMS, Voice call, MMS.

The **Implementation details** include different algorithm codes which were done via an Ericsson based tool called WINFIOL for different link sets to check the signalling status as to whether they were in active state or not.

The **Result and Discussion** section covers the outcomes of accuracy of the implementation of the different cases tested.

The **Summary and Conclusion** mentions the list of all that has been accomplished and all that can be modified for future scope.

The **Reference** section includes all the books, manuals, sites that have been referred for project work are mentioned exclusively at the end.

2 DESIGN STRATEGY FOR SOLUTION

2.1 Block Diagram:

2.1.1 Voice - Current or Pre- MNP architecture:

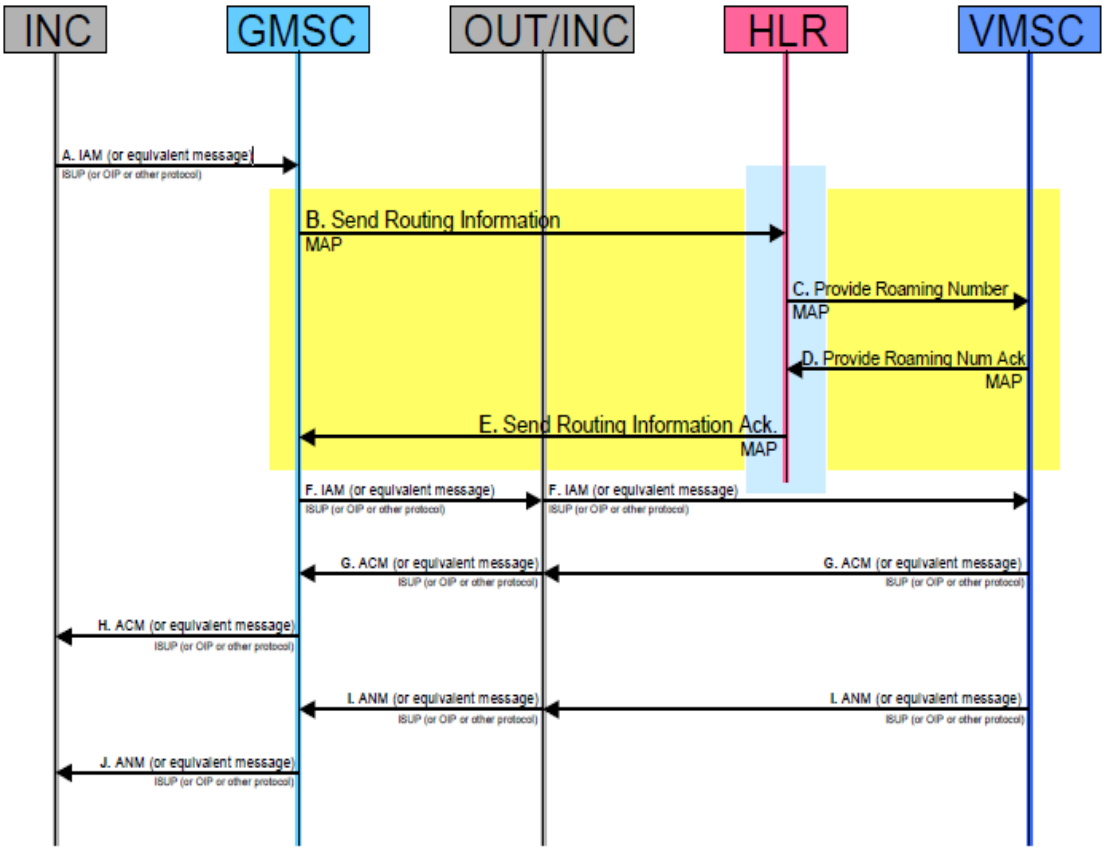

Fig 1.8: Voice - Pre MNP Architecture

2.1.1.1 The GMSC call scenario is initiated by a TRAM (TRansit AM) receiving an OIP-IAM (Initial Address Message) message and the B- number analysis associated to this message leads to the seizure of a GRI (GMSC Roaming Interrogation) route. The OIP-IAM is sent to TRAM by its incoming side, which can be an ISUP trunk, an originating mobile or any device/subsystem that can initiate a call process.

2.1.1.2 Using the MSISDN (dialled digits), the GMSC contacts the HLR for information about the subscriber being called in order to determine how to route the call. The GMSC sends a MAP-SRI (Send Routing Information) message to the HLR for this purpose. The assumption in this example is that the MS is attached to a VMSC (MSC/VLR) in idle state and capable of receiving this call; hence, the location in the HLR is set.

2.1.1.3 Upon reception of the MAP-SRI message, the HLR uses the MSISDN within the message to find the subscriber profile within its database. The HLR profile contains all the relevant subscriber data. After a list of checks to determine if certain features that need to be triggered prior to call delivery are applicable, the HLR sends a MAP-PRN (Provide Roaming Number) to the VMSC pointed to by the location data within the subscriber profile.

2.1.1.4 Upon receiving the MAP-PRN message, the VMSC (MSC/VLR) assigns an MSRN (Mobile Station Roaming Number) to this call. The MSRN temporarily represents the called subscriber within the VMSC and thus will allow the call to be routed from the GMSC to the VMSC. Note that the GMSC and VMSC parts of a call delivery scenario can be located within the same node. The VMSC returns the MSRN within the MAP-PRN-Ack message to the HLR.

2.1.1.5 The HLR in turn forwards the MSRN to the GMSC within the MAP-SRI-Ack message.

2.1.1.6 The GMSC then seizes a new TRAM on its outgoing side and sends it an OIP-IAM with the MSRN as the dialled digits. Analysis of this OIP-IAM within the TRAM should lead to either an outgoing trunk route or to a mobile termination if the GMSC and VMSC are within the same MSC.

2.1.1.7 As a result of the OIP-IAM and any subsequent signalling, such as an ISUP-IAM, the call successfully progresses to the VMSC. Once the call reaches its destination and the subscriber is found to be idle, an ACM (Address Complete Message) type message is expected to make its way back through the call chain. Eventually the GMSC receives an ACM type message.

2.1.1.8 Upon receiving the ACM type message, the GMSC stores certain data found within the ACM (i.e. billing data) and transits the ACM to its incoming side, INC.

2.1.1.9 It is also assumed that the call is eventually answered. As a result, an ANM (ANswer Message) type message is expected to makes its way back through the call chain. Eventually the GMSC receives an ANM type message.

2.1.1.10 Upon receiving the ANM type message, the GMSC stores certain data found within the ANM (i.e. billing data) and transits the ANM to its incoming side, INC.

2.1.2 SMS - Pre MNP Architecture

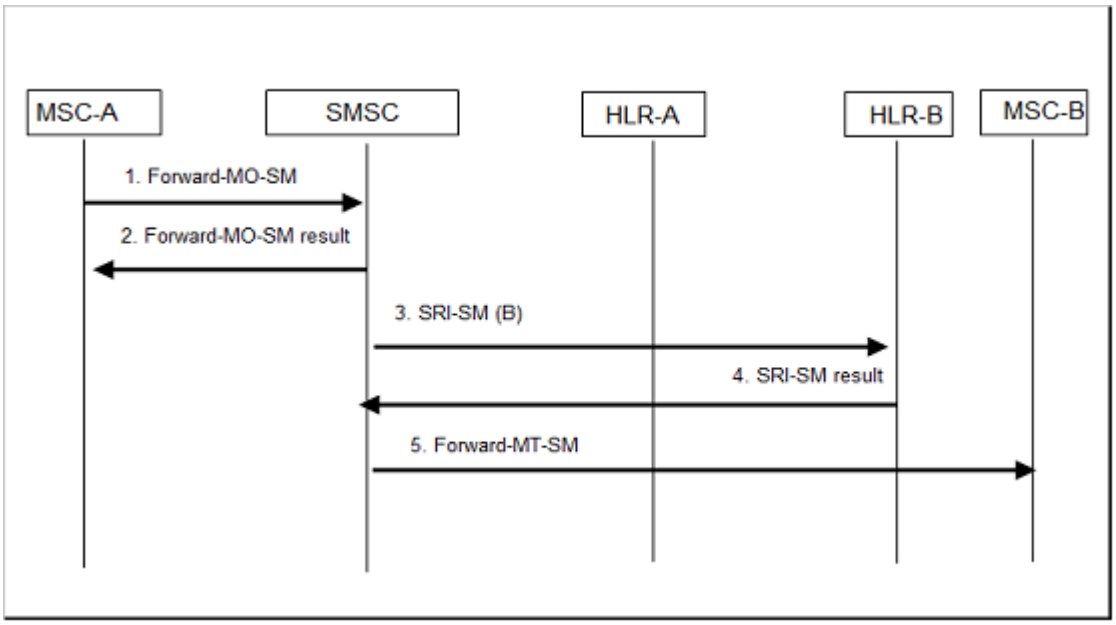

Fig 1.9: SMS – Pre MNP

2.1.2.1 Pre MNP MSC initiates a MO_FSM to SMSC. Thereafter SMSC initiates a SRI_SM towards HLR to find out the MSC ID of B party.

2.1.2.2 Post MNP, it is important to do NPDB lookup to find out the serving network of B number. Therefore NPDB intercepts the SRI_SM message, adds LRN to it & routes it to corresponding HLR.

2.1.2.3 Some operators had requirement of B party IMSI in MSC SMS CDRs. A correction is required to be loaded in MSC to implement the same. When the MSC is ready to produce the MO-SMS CDR, it will perform a HLR interrogation in order to retrieve the IMSI of the final receiver of the SMS. Once the IMSI is retrieved, it will be included in the MO-SMS CDR with the new parameter for the MO-SMS CDR "calledSubscriberIMSI".

2.1.2.4 The parameter "calledSubscriberIMSI" is an existing parameter for MT-SMS CDR and now it will be used also in the MO-SMS CDR.

2.1.2.5 The interrogation of the HLR will be performed via MAPv1/v2 “SendRoutingInfoforSM” message. In order to interrogate the correct HLR, a MNP SRF node is needed which will receive the MAP message from the MSC and will route it to the correct HLR.

2.1.3 Out Dialler Services - Pre MNP Architecture

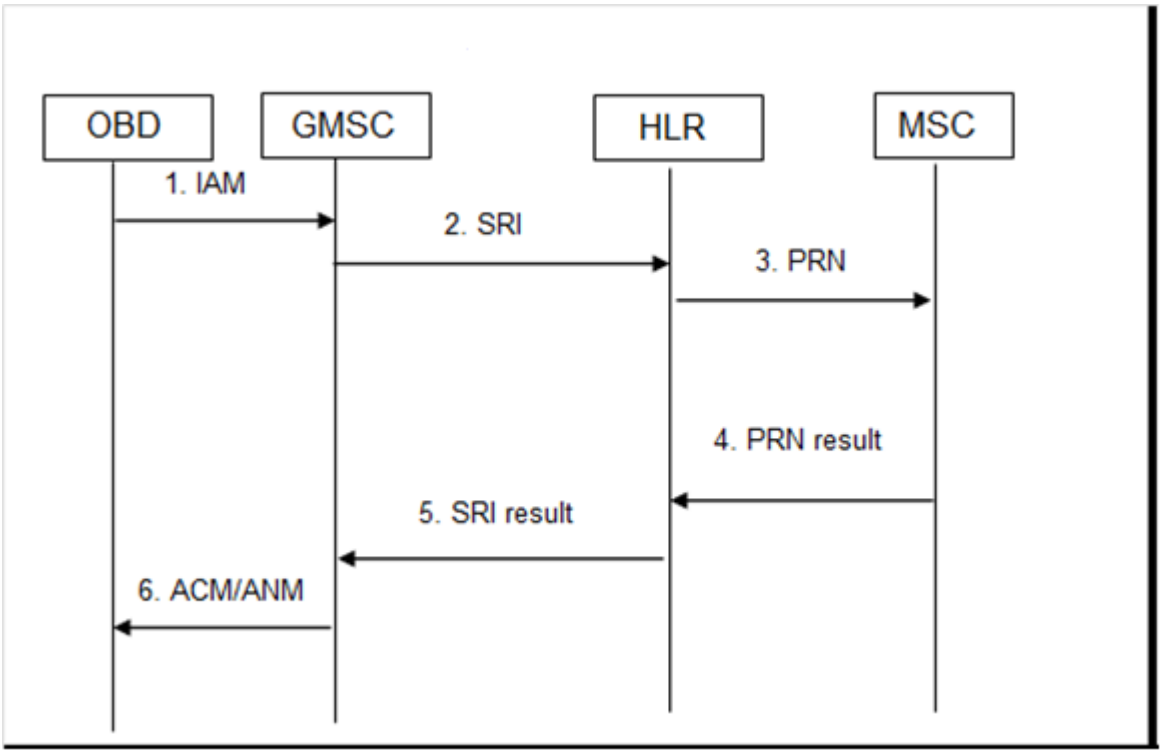

Fig 2.1: Out Dialler – Pre MNP

2.1.3.1 MSC/GMSC initiates SRI for a call to another national mobile number in order to retrieve routing info from HLR.

2.1.3.2 HLR then sends PRN request to the B number's MSC for acknowledgement.

2.1.4 Voice - Proposed or Post- MNP architecture:

2.1.4.1 Voice - Mobile to PSTN (Asub Pre-/Post-paid)

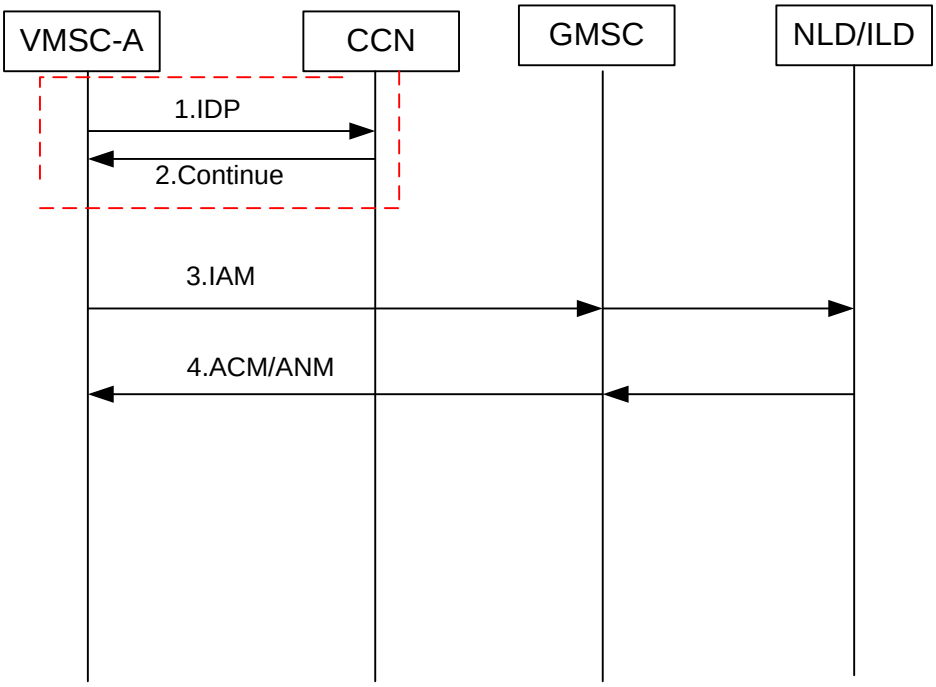

Fig 2.2: Voice - Mobile to PSTN (Asub Pre-/Post-paid)

This scenario illustrates A-subscriber is either Pre paid or Post paid and B-subscriber is either PSTN or international mobile subscriber.

2.1.4.1.1 VMSC sends IDP to CCN. Called party in the SCCP component.

2.1.4.1.2 CCN will not check portability status as the Bnumber is not within the portability domain. CCN will verify charging and then send Continue to SSF/VMSC called party number equal to the original called Party number.

2.1.4.1.3 VMSC route the call (IAM) towards Bsubscribers network using routing number via ISUP to the GMSC/NLD/ILD.

2.1.4.1.4 ACM/ANM comes back from Bsubscribers network speech can be established.

2.1.4.2 Voice - Mobile to Mobile Ported in (Asub Pre-/Post-paid)

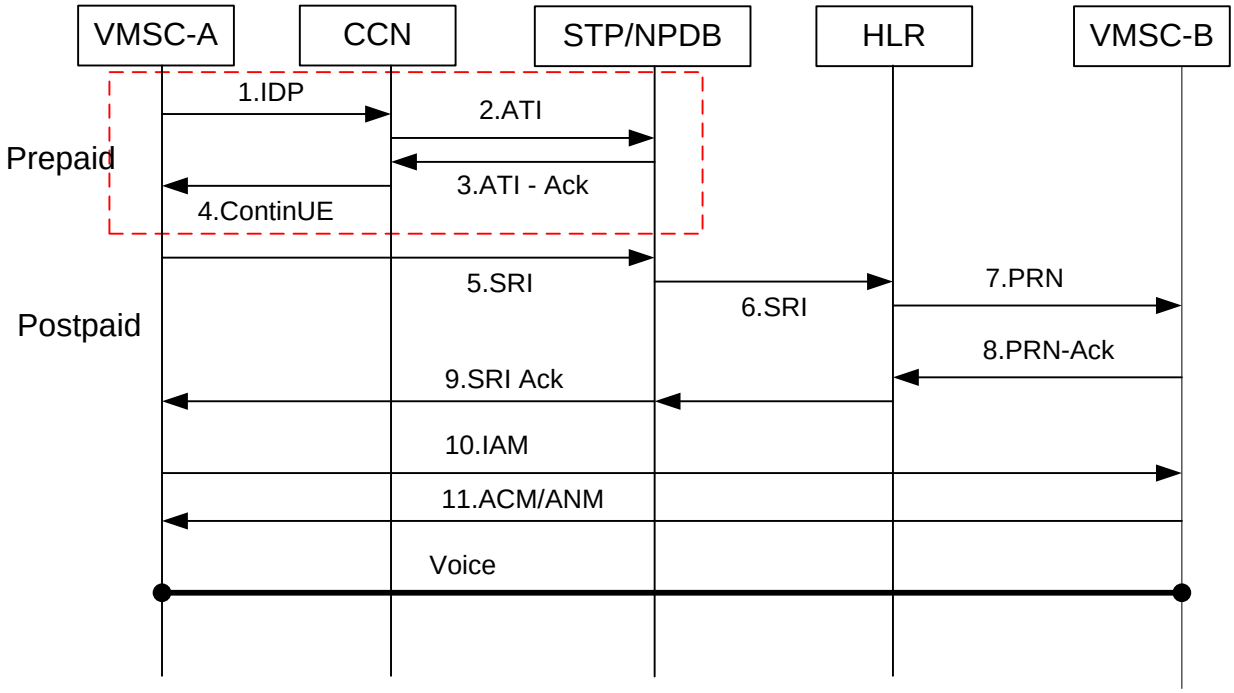

Fig 2.3: Voice - Mobile to Mobile Ported In (Asub Pre-/Post-paid)

This scenario illustrates both scenarios where A-subscriber is Pre paid and Post paid. MS-MS Voice Call, Asub prepaid or post-paid and Bsub home/ported in

2.1.4.2.1 VMSC sends IDP to CCN. Called party in the SCCP component.

2.1.4.2.2 CCN sends ATI (Any Time Interrogation to NPDB to fetch portability status.

2.1.4.2.3 NPDB sends ATI result back to CCN with portability status.

2.1.4.2.4 CCN will use the routing information to charge then send a Continue/connect message with the called party BCD number equal to the Routing Number + original called Party BCD number.

2.1.4.2.5 VMSC sends SRI (send Routing number) to NPDB to enquire about B-number.

2.1.4.2.6 NPDB knows the Bnumber is NOT ported out and will forward the SRI to the correct HLR with MSISDN in the SCCP Called Party Address.

2.1.4.2.7 HLR receives SRI and will send PRN - provide roaming number to destination VMSC.

2.1.4.2.8 VMSC returns PRN Result with MSRN of C-subscriber to HLR

2.1.4.2.9 HLR returns SRI Result with MSRN to the originating VMSC.

2.1.2.1.2.10 VMSC uses MSRN to route the call over ISUP to destination MSC.

2.1.4.3 Voice - Mobile to Mobile Ported Out (Asub Pre-/Post-paid)

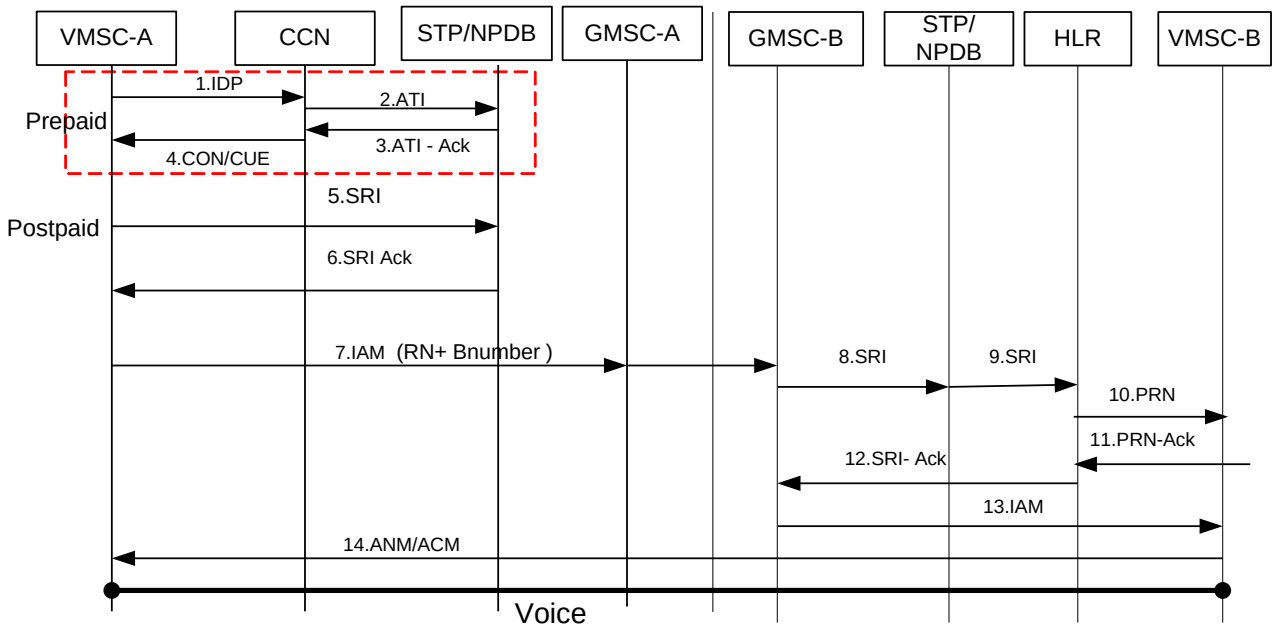

Fig 2.4: Voice - Mobile to Mobile Ported Out (Asub Pre-/Post-paid)

2.1.4.3.1 VMSC sends IDP to CCN (NPDB relay IDP).

2.1.4.3.2 CCN sends ATI (Any Time Interrogation to NPDB to fetch portability status.

2.1.4.3.3 NPDB sends ATI result back to CCN with portability status

2.1.4.3.4 CCN will use the routing information to charge then send a Continue/connect message with the called party BCD number equal to the Routing Number + original called Party BCD number.

2.1.4.3.5 VMSC sends SRI (send Routing number) to NPDB to enquire about B-number.

2.1.4.3.6 NPDB knows the Bnumber IS ported out and will reply SRI Result back to VMSC with Routing number and Bnumber. BNT=national. Number Portability Status=set.
NPS=own number ported out or foreign number ported to foreign

2.1.4.3.7 VMSC sends IAM to route the call to the foreign network over ISUP.

2.1.4.3.8 GMSC in receiving network will send SRI to HLR to find the location of Bnumber. NPDB should not check for number portability but let SRI pass transparent via STP/NPDB. GMSC should remove "RN" from the incoming number and send SRI to HLR. To avoid portability check by NPDB, a different TT value needs to be used in the SRI. To facilitate different TT values in the GRI route, an MDE needs to be loaded in GMSC to facilitate different TT values in GRI route.

2.1.4.3.9 HLR receives SRI and will send PRN (Provide roaming number) to destination VMSC.

2.1.4.3.10 VMSC returns PRN Result with MSRN of B-subscriber to HLR.

2.1.4.3.11 HLR returns SRI Result with MSRN of B-subscriber to GMSC

2.1.4.3.12 GMSC use MSRN to route the call over ISUP to destination MSC.

2.1.4.4 Voice - Mobile to Mobile Ported In and Roam Out (Asub Pre-paid)

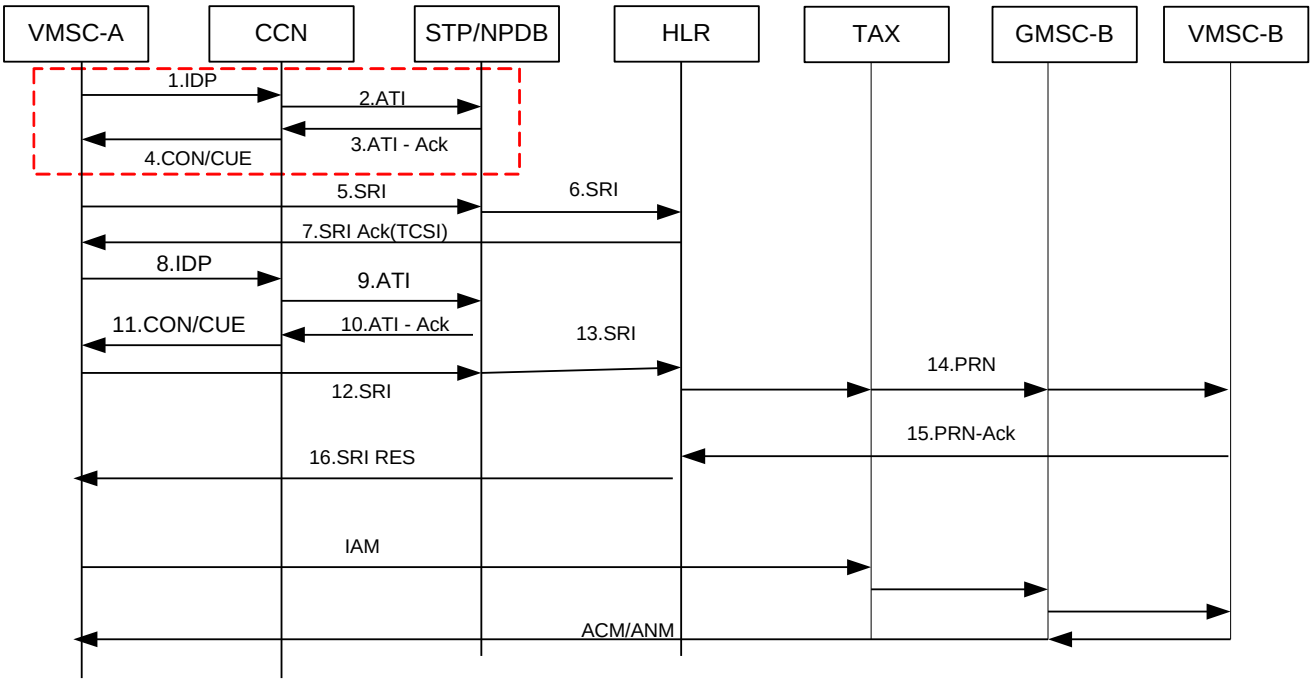

Fig 2.5: Voice - Mobile to Mobile Ported In and Roam Out (Asub Pre-paid)

2.1.4.4.1 VMSC sends IDP to CCN (NPDB relay IDP).

2.1.4.4.2 CCN sends ATI (Any Time Interrogation to NPDB to fetch portability status.

2.1.4.4.3 NPDB sends ATI result back to CCN with Bsub portability status.

2.1.4.4.4 CCN will use the routing information to charge then send a Continue/Connect message with the called party BCD number equal to the Routing Number + original called Party BCD number.

2.1.4.4.5 VMSC sends SRI (send Routing number) to NPDB to enquire about B-number.

2.1.4.4.6 NPDB knows the Bnumber is NOT ported out and will forward the SRI to the correct HLR with MSISDN in the SCCP Called Party Address.

2.1.4.4.7 HLR knows Bsubscriber is Prepaid and is roaming out. HLR sends SRI Result back to VMSC with TCSI=1 (Terminating Camel Subscription Info).

2.1.4.4.8 VMSC sends IDP to CCN.

2.1.4.4.9 CCN sends ATI (Any Time Interrogation to NPDB to fetch portability status. (SSN only used for Ericsson FNR)

2.1.4.4.10 NPDB sends ATI result back to CCN with Bsub portability status

2.1.4.4.11 CCN will use the routing information to charge then send a Continue/Connect message with the called party BCD number equal to the Routing Number + original called Party BCD number. CCN will verify that Bsubscriber has funds to roam out.

2.1.4.4.12 VMSC sends SRI (send Routing number) to NPDB to enquire about B-number.

2.1.4.4.13 NPDB knows the Bnumber is NOT ported out and will forward the SRI to the correct HLR with MSISDN in the SCCP Called Party Address.

2.1.4.4.14 HLR receives SRI and will send PRN - provide roaming number to destination VMSC

2.1.4.4.15 VMSC returns PRN Result with MSRN of C-subscriber to HLR

2.1.4.4.16 HLR returns SRI Result with MSRN to the originating VMSC.

2.1.4.5 Voice - POI to Mobile

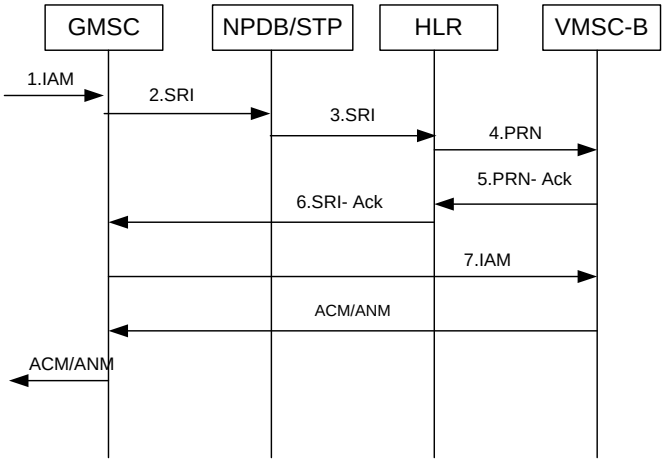

Fig 2.6: Voice - POI to Mobile

Asubscriber: Any subscriber from another network
Bsubscriber: Home/ported in.

This scenario assumes portability check has been done in N-1 operator network and should not make portability check. The incoming IAM has already correct information about Bsubscribers network.

2.1.4.5.1 GMSC Receives an IAM from another circle/network for a call terminating in the home circle.

2.1.4.5.2 The GMSC will delete the RN and send a "Send Routing Information" to the NPDB with MSISDN as Called Party Address in the SCCP component and a non zero TT. This TT will be defined in the GRI route for this call case.

2.1.4.5.3 As the SRI comes in with NON zero TT value, NPDB knows that it should not do portability check and pass the SRI to the correct HLR. If the MSISDN is NOT listed as imported/home with a non zero TT then the call will fail as it will assume that the database is not correct. NPDB must then return SRI Result to GMSC with appropriate error code. This would be the case when the originating network has sent the IAM to this network by mistake or there is a mismatch between the NPDB databases which could possible happen as a provisioning error.

2.1.4.5.4 HLR sends "Provide Roaming Number" to the terminating MSC

2.1.4.5.5 Terminating MSC returns PRN Result to the HLR with a Roaming Number (MSRN).

2.1.4.5.6 HLR returns SRI-Res to the GMSC with the MSRN.

2.1.4.5.7 GMSC uses the MSRN to route the call over ISUP to the Destination MSC.

2.1.5 SMS – Post MNP Architecture

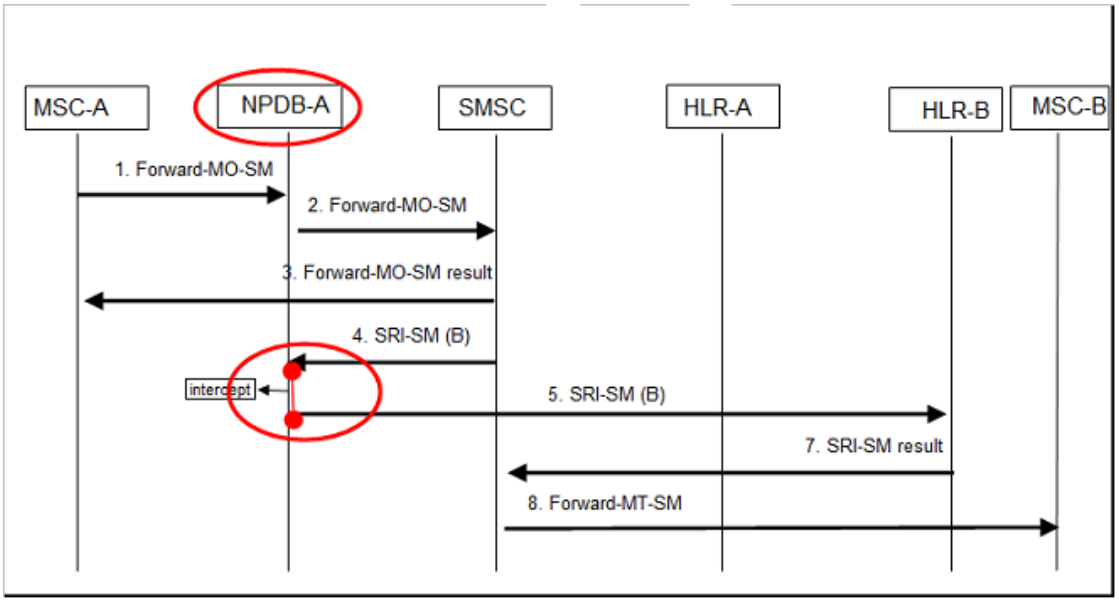

Fig 2.7: SMS – Post MNP

2.1.5.1 All SRI_SM will be addressed to NPDB.

2.1.5.2 NPDB intercepts the SRI_SM, adds LRN in called party address and routes it to correct HLR.

2.1.5.3 To get B party IMSI in MO SMS CDR, MSC will initiate SRI_SM towards NPDB.

2.1.5.4 In case of prepaid mobile originated SMS, CCN need to have LRN for correct charging. CCN will get LRN information either by doing MAP_ATI to NPDB or NPDB intercepts the IDP.

2.1.6 Out Dialler Services - Post MNP Architecture

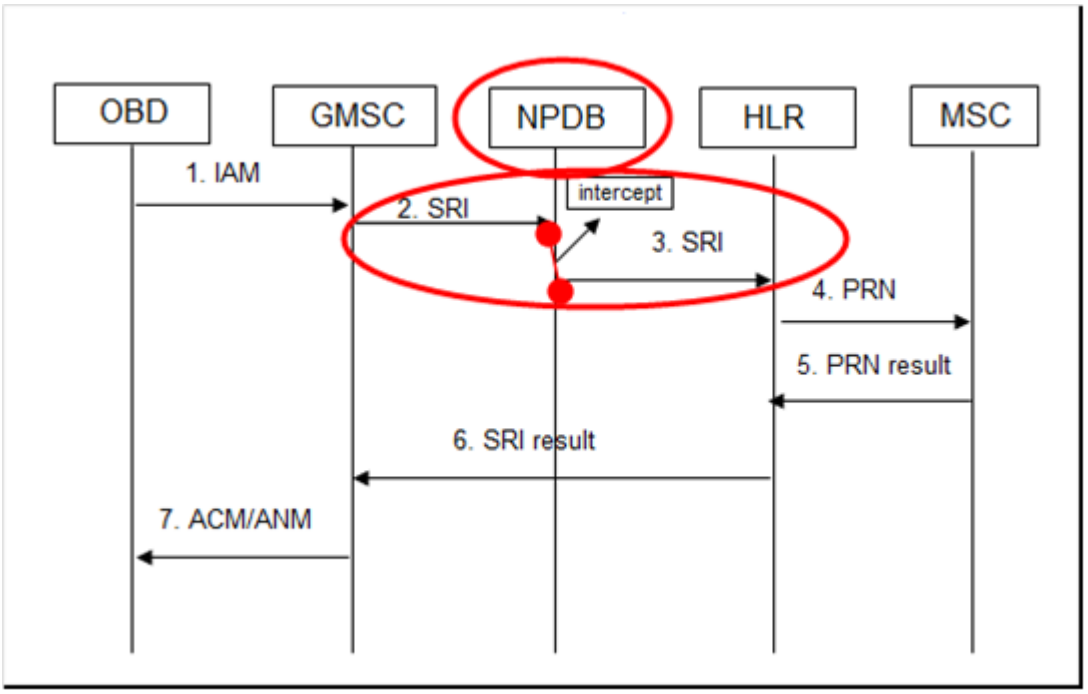

Fig 2.8: Out Dialler – Post MNP

Major changes in Post-MNP call flows will be;

2.1.6.1 MSC/GMSC need to initiate SRI for a call to another national mobile number in order to retrieve the portability status.

2.1.6.2 All such SRIs will be addressed to NPDB including calls to home number series.

2.1.6.3 NPDB looks for B number in portability database & if the b-number is;

2.1.6.4 Imported or home subscriber, NPDB relays the SRI to HLR. HLR sends the MSRN to MSC in SRI_ACK.

2.1.6.5 Foreign or exported subscriber, NPDB return LRN+B number in SRI_ACK.

2.1.7 Delhi Circle – Core Network Architecture for Signalling

2.1.7.1 Current or Pre MNP core architecture:

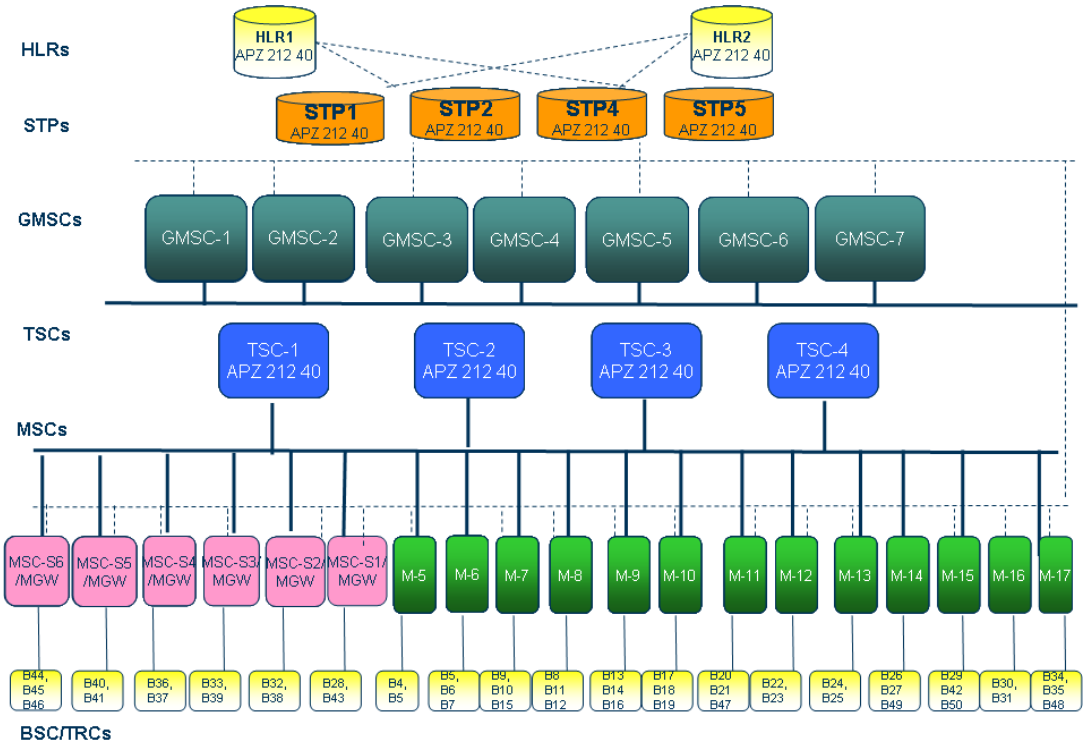

Fig 2.9: Current Core Network for Signalling – Pre MNP

Today all signalling between monolithic MSC/MSC-S and STPs are High Speed Links. Signalling between STPs and the two HLRs are also using HSL. Between each STP and each HLR there are 4 HSLs. Each HLR was equipped with APZ21240/8GB memory. The memory capacity is almost fully utilized and there is not enough capacity to expand the memory further on APZ 21240. Therefore, both HLRs are upgraded to APZ 21250 with 24GB memory. Along with this upgrade, there will also be HLR redundancy deployed. This will be done before MNP implementation.

2.1.7.2 Proposed or Post MNP core architecture:

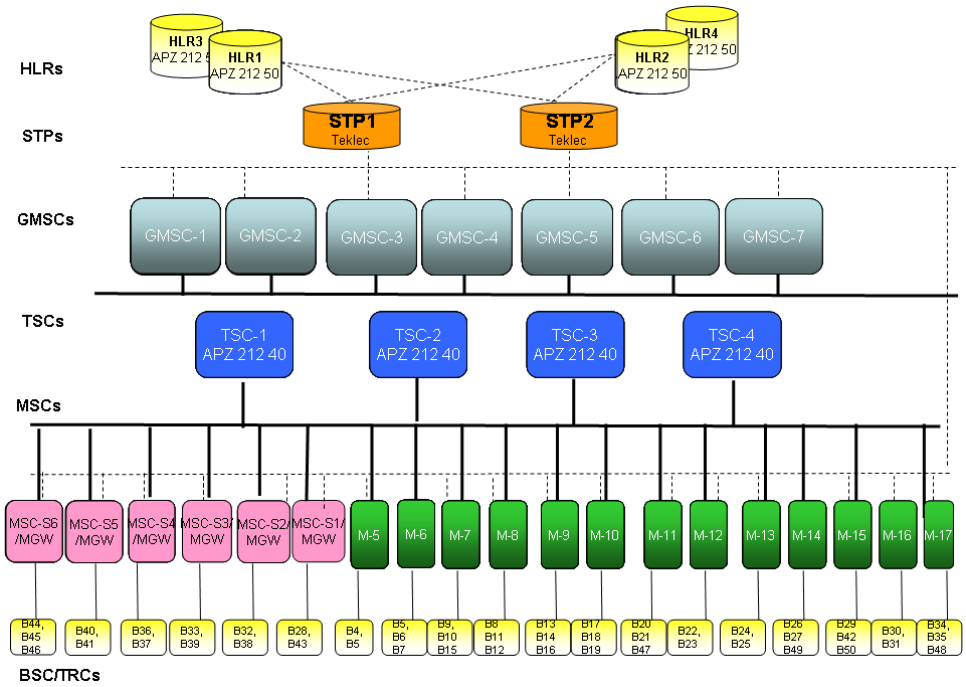

Fig 3.1: Proposed Core Network for Signalling – Post MNP

Bharti has decided to go ahead with STP/NPDB of Tekelec. In Delhi, 2 STP pairs of Ericsson will be replaced instead of 1 Pair of Tekelec's STP in the proposed core network because of the following reasons:

2.1.7.2.1 Faster and Efficient Signaling

2.1.7.2.2 Higher Memory storage capacity

2.1.7.2.3 Low Implementation and Maintenance cost involved

2.2 Flow Chart:

A Flow Chart depiction of steps involved for porting a number:

It starts from a subscriber raising a porting request to Recipient Operator and ends with number activated in Recipient's network. A subscriber may within twenty four hours withdraw the porting request by informing the Recipient Operator.

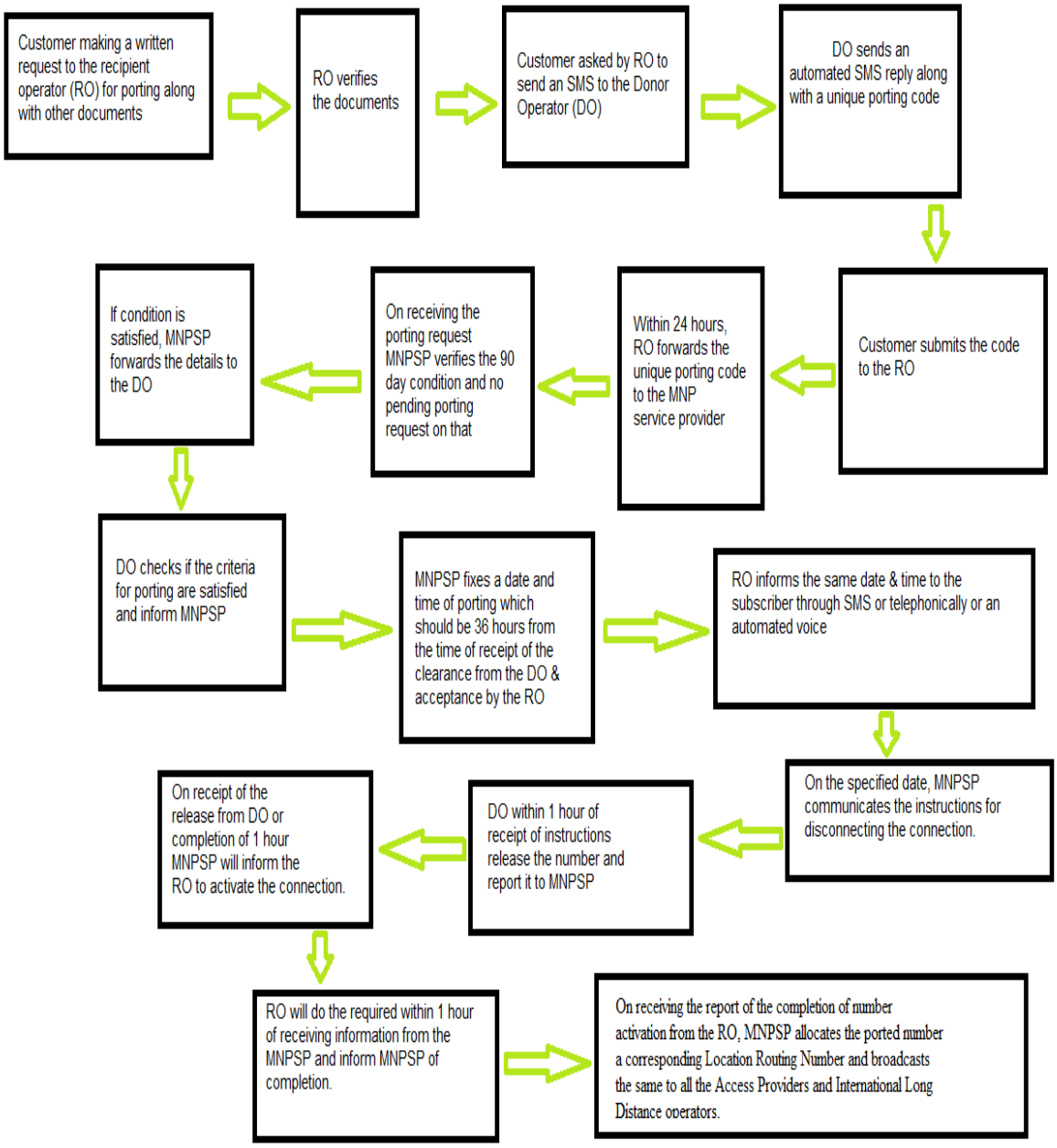

Fig 3.2: Flowchart depiction for Portability status

3 IMPLEMENTATION DETAILS

3.1 Algorithm and Description

The following Ericsson base codes through the WINFIOL tool have been used for signalling purposes between nodes to check whether the Point codes and Link sets involved in routing of calls could be activated at any point of time or not.

3.1.1 MSC 5:

Algorithm:

Step 1 Start or Activate node MSC 5.
Step 2 Define own Signalling Point in switch.
Step 3 Define Link Set.
Step 4 Show all links with MSC 5 and whether in Active state or not.
Step 5 If Signalling Link is in Active state, then show priority wise routing of MSC 5 through STP's by defining DPC.
Step 6 Define Speech Route for the Link set.
Step 7 Else Signalling Link is in Inactive state.
Step 8 Exit

WINFIOL Code:

```
eaw MSC 5;
C7OPI: OWNSP=2-8822;
C7LDI: LS=2-8012;
C7SPP: LS=ALL;
C7LAI: LS=2-8012, SLC=Active;
EXROI: R=2-8012, FNC=3, DETY=upd; SP=2(dpc), SI=4 (isup)
C7RSP: DEST=3-750;
EXIT;
```

3.1.2 MSC 6:

Algorithm:

Step 1 Start or Activate node MSC 6.
Step 2 Define own Signalling Point in switch.
Step 3 Define Link Set.
Step 4 Show all links with MSC 6 and whether in Active state or not.
Step 5 If Signalling Link is in Active state, then show priority wise routing of MSC 6 through STP's by defining DPC.
Step 6 Define Speech Route for the Link set.
Step 7 Else Signalling Link is in Inactive state.
Step 8 Exit

WINFIOL Code:

```
eaw MSC 6;
C7OPI: OWNSP=2-865;
C7LDI: LS=2-342;
C7SPP: LS=ALL;
C7LAI: LS=2-342, SLC=Active;
C7RSP: DEST=3-781;
EXROI: R=2-342, FNC=3, DETY=upd; SP=2(dpc), SI=4 (isup)
EXIT;
```

3.1.3 GMSC 1:

Algorithm:

Step 1 Start or Activate node GMSC 1.
Step 2 Define own Signalling Point in switch.
Step 3 Define Link Set.
Step 4 Show all links with GMSC 1 and whether in Active state or not.
Step 5 If Signalling Link is in Active state, then show priority wise routing of GMSC 1 through STP's by defining DPC.
Step 6 Define routing specifications for speech.
Step 7 Specify data for signalling links.
Step 8 Define Speech Route for the Link set.
Step 9 Else Signalling Link is in Inactive state.
Step 10 Exit

WINFIOL Code:

```
eaw GMSC 1;
C7OPI: OWNSP=2-361;
C7LDI: LS=2-707;
C7SPP: LS=ALL;
C7LAI: LS=2-707, SLC=Active;
C7RSP: DEST=3-210;
C7RSI: DEST=3-210, LS=2-707;
C7SLI: LS=2-707, SLC=Active, ACK=1;
EXROI: R=2-707, FNC=3, DETY=upd; SP=3(dpc), SI=2;
EXIT;
```

3.1.4 GMSC 4:

Algorithm:

Step 1 Start or Activate node GMSC 4.
Step 2 Define own Signalling Point in switch.
Step 3 Define Link Set.
Step 4 Show all links with GMSC 4 and whether in Active state or not.
Step 5 If Signalling Link is in Active state, then show priority wise routing of GMSC 4 through STP's by defining DPC.
Step 6 Define routing specifications for speech.
Step 7 Specify data for signalling links.
Step 8 Define Speech Route for the Link set.
Step 9 Else Signalling Link is in Inactive state.
Step 10 Exit

WINFIOL Code:

```
eaw GMSC 4;
C7OPI: OWNSP=3-23;
C7LDI: LS=3-67;
C7SPP: LS=ALL;
C7LAI: LS=3-67, SLC=Active;
C7RSP: DEST=3-542;
C7RSI: DEST=3-542, LS=3-67;
C7SLI: LS=3-67, SLC=Active, ACK=1;
EXROI: R=3-67, FNC=3, DETY=upd; SP=3(dpc), SI=2;
EXIT;
```

3.1.5 HLR 2:

Algorithm:

Step 1 Start or Activate node HLR 2.
Step 2 Define own Signalling Point in switch.
Step 3 Define Link Set.
Step 4 Show all links with HLR 2 and whether in Active state or not.
Step 5 If Signalling Link is in Active state, then show priority wise routing of HLR 2 through STP's by defining DPC.
Step 6 Define routing specifications for speech.
Step 7 Specify data for signalling links.
Step 8 Define Speech Route for the Link set.
Step 9 Block the signalling route.
Step 10 Else Signalling Link is in Inactive state.
Step 11 Exit

WINFIOL Code:

```
eaw HLR 2;
C7OPI: OWNSP=2-71;
C7LDI: LS=3-544;
C7SPP: LS=ALL;
C7LAI: LS=3-544, SLC=Active;
C7RSP: DEST=3-20;
C7RSI: DEST=3-20, LS=3-544;
C7SLI: LS=3-544, SLC=Active, ACK=1;
EXROI: R=3-544, FNC=4, DETY=upd; SP=7(dpc), SI=2;
C7RAE: DEST=3-20, LS=3-544;
EXIT;
```

4 DETAILED TEST PLAN

4.1 Unit Testing

The unit testing was performed on Dummy Numbers of All Mobile and Fixed line operators within the Delhi circle having Airtel as the Recipient operator.

These numbers were tested in account to check their Portability status by querying with their local NPDB and their Charging capability by examining the CDR (Call Data Records) of the respective numbers.

Those numbers (MSISDN number series) are in **ACTIVE** state if they are being charged properly. If not, then the respective routing link over which the call flow took place would denote an **INACTIVE** state.

This kind of testing is called **IOT (Inter Operator Test)** which was performed for 3 cases at different nodal locations have been mentioned below:

4.1.1 Test Result for Case 1 : Voice Call

In Voice call testing, dummy numbers were tested with ported in numbers of other operators for prepaid and post-paid connections within home network and on roaming.

Out of 9 numbers which were tested, an Inactive state was observed for **1** number, an Aircel number with MSISDN series starting with +919716.

Test Case 1 : Voice Call Originating from All Mobile & Fix Line Operators in Circle and Termination in Recipient Operator (Airtel)

Ported In Nos. of Operator 1 with Airtel (Called Number)		Calling Nos. of Operator X								
		Prepaid			Postpaid			Prepaid Outroamer		
		Calling No.	Duration	Remarks	Calling No.	Duration	Remarks	Calling No.	Duration	Remarks
Prepaid or Postpaid (In Home Network)	9971235478	9540253421	00:07	Active	9953784300	01:09	Active	9268211343	00:10	Active
Prepaid Outroaming	9871677312	9968114368	00:32	Active	9911964419	00:34	Active	9716652197	02:34	Inactive
Postpaid Outroaming	9818447965	99997000834	00:51	Active	9013900674	00:47	Active	9212899436	01:00	Active

Fig 3.3: Testing – Voice Call

4.1.2 Test Result for Case 2 : SMS

In SMS testing, dummy numbers were tested with ported in numbers of other operators for prepaid and post-paid connections within home network and on roaming.

Out of 9 numbers which were tested, **None** were found to be in an Inactive state. All were found in Active state as charging was performed successfully for the numbers tested below.

Test Case 2 : SMS Originating from from All Mobile & Fix Line Operators in Circle and Termination in Recipient Operator (Airtel)

Ported In Nos. of Operator 1 with Airtel (Called Number)		Calling Nos. of Operator X								
		Prepaid			Postpaid			Prepaid Outroamer		
		Calling No.	Duration	Remarks	Calling No.	Duration	Remarks	Calling No.	Duration	Remarks
Prepaid or Postpaid (In Home Network)	9800540894	9540253421	00:09	Active	9953784300	00:34	Active	9268211343	00:09	Active
Prepaid Outroaming	9871677312	9968114368	00:12	Active	9911964419	00:21	Active	9971652197	00:13	Active
Postpaid Outroaming	9818447965	9999700834	00:03	Active	9013900674	00:07	Active	9212899436	00:04	Active

Fig 3.4: Testing – SMS

4.1.3 Test Result for Case 3 : MMS

In MMS testing, dummy numbers were tested with ported in numbers of other operators for prepaid and post-paid connections within home network and on roaming.

Out of 9 numbers which were tested, **2** Inactive states were observed, a MTNL number with MSISDN series starting with +919968 and an IDEA number with MSISDN series starting with +919911.

Test Case 3 : MMS Originating from from All Mobile & Fix Line Operators in Circle and Termination in Recipient Operator (Airtel)

Ported In Nos. of Operator 1 with Airtel (Called Number)		Calling Nos. of Operator X								
		Prepaid			Postpaid			Prepaid Outroamer		
		Calling No.	Duration	Remarks	Calling No.	Duration	Remarks	Calling No.	Duration	Remarks
Prepaid or Postpaid (In Home Network)	9818235478	9540253421	01:09	Active	9953784300	02:45	Active	9268211343	00:14	Active
Prepaid Outroaming	9650677312	9968114368	01:44	Inactive	9911964419	03:21	Inactive	9971652197	01:57	Active
Postpaid Outroaming	9717447965	9999700834	02:01	Active	9013900674	01:23	Active	9212899436	00:45	Active

Fig 3.5: Testing – MMS

4.2 Integration Testing

The Final integration testing of Mobile Number Portability is still underway which is to be completed due late May 2010.

The final integration testing will be including tests on the remaining nodes of Airtel, their consolidation of networking elements which are placed at 4 locations namely Okhla, Vikaspuri, Noida and Gurgaon. Some of the impacts which have yet to be successfully tested for all operators are as under:

4.2.1 Integration of NPDB

4.2.2 Query NPDB for every Mobile to Mobile call

4.2.3 CDR logic change as per billing requirements

4.2.4 Capacity and signalling impacts

4.2.5 Inter-operator agreements

5 RESULT AND DISCUSSION

5.1 MNP Impact on various parameters :

5.1.1 Voice Call - Any Bnumber that is a potential ported subscriber will have to be checked in the NPDB what the status is. If the subscriber is really ported in, the SRI request will be passed on to HLR.
HLR will do a query towards terminating VLR with MAP PRN (provide roaming number). PRN ACK will come back to HLR with MSRN in international format.
HLR will send SRI RESULT back to MSC with MSRN in national format.

In NPDB, only numbers that have been ported in or ported out will be defined. Subscribers who have not been ported in/out will not exist in the NPDB. Mobile charging CDR Will is populated with "calledPartyMNPInfo", although charging remains the same as pre MNP.

MNP Impact – YES

5.1.2 SMS - A subscriber sends an SMS to B subscriber. The MAP message MO_FORWARD_SM will be intercepted by NPDB by inserting RN in front of the Bnumber. The reason for this is so any interworking node can decide on differentiated charging. If Bharti use MAPv3 towards SMSC then Anumber IMSI will be forward to SMSC. SMSC could do a check on IMSI to verify that Asubscriber belongs to this service center before proceeding with the SMS delivery. At the moment, Bharti is using SRI_SM to query Asubscribers HLR for IMSI and location information in order to prevent spamming.
Before delivering SMS to terminating side, SMSC needs to make another NPDB query to find out the portability status and location of Bsubscriber.

For any **Prepaid call**, an IDP will be sent to the subscribers IN node. Depending on if the subscriber is in home network or in roamer the reply on IDP will be either CONTINUE or CONNECT signal.

MNP Impact – YES

5.1.3 Out dialler/VAS Services - MNP impact on VAS & other miscellaneous services also needs to be ascertained. This section summarises the generic services operation in India & expected impact due to MNP.

Call Forwarding: MSISDN series of C-number cannot be used to identify its network. Therefore such forwarding restrictions would not be possible from HLR. The alternate way could be to restrict it in MSCs forwarding table based on LRN of C-number received from NPDB.
MNP Impact – YES

Missed Call Alert: Missed Call Alert (MCA) is an extended communication tool for unavailable subscribers, sending information on any missed call to the subscriber. With subscribers missing calls for a variety of reasons - network coverage, out of reach situations, or a switched off phone, it is a solution ensuring a subscriber knows who has called. Subscribers receive missed call information in an SMS. As soon as subscriber is back in the coverage area, or switches on the phone, he gets an SMS notification which will have the details of the missed calls. Post MNP also the C-number received due to DCF can still remain routed towards the MCA.

MNP Impact – NO

CRBT: CRBT is a hugely popular service, which allows subscribers to choose a tune or song to be played to callers, in place of the traditional ‘tring tring’ or 'beep beep'. Whenever there is a terminating call for a subscriber who has activated CRBT services, MSC initiates another call leg towards CRBT box, which plays a song in place of normal ring back tone until B party answers the call or no answer time out. Generally MSC initiates an IAM towards CRBT box with called party number as “some short code like 42894” + B number. As it involves, direct routing to CRBT box & hence NO IMPACT on this service.

MNP Impact – NO

Voice SMS: Voice SMS allows users to send voice messages in the form of audio files that are sent to the recipients. User can send a Voice SMS message to any mobile number in India by dialling * and suffixing it with the recipient's mobile number (*9xxxxxxxxx). The B party receive an out bound call with A number as the CLI of sender. He can then pick up the message immediately or retrieve and reply later at his convenience.

Now the call to Bsubscriber will be subject to MNP as NPDB lookup will be required to route the calls to correct destinations or restrict it.

MNP Impact – YES

5.1.4 ANNOUNCEMENTS - Network operators might have requirement of playing any new announcement post MNP. There could be multiple scenarios where announcement can be played. Like for informing the status of ported out subscribers OR pre-call announcement informing change in tariff due to change in portability etc.
MNP Impact – YES

5.1.5 CDR IMPACT - Differential tariff is used by the operators for various call scenarios, like call between subscribers of own network are charged differently then calls made to other network. With Mobile Number Portability, the Mobile Station ISDN Number (MSISDN) of the called subscriber will no longer identify the subscription network. Hence, it is not possible to distinguish own subscribers and subscribers of other networks only by analyzing the number series of the subscriber numbers.

Therefore, portability information is needed in the CDR in order to apply the correct tariff for a call to a ported number.

The standard handling mechanism in Ericsson MSC is that additional "CalledPartyMNPInfo" field will be output for ported number only. Ericsson MSC supports the same with the feature "**Charging support for Number portability**".
MNP Impact – YES

5.1.6 PROCESSOR LOAD - Processor load of MSCs/MSC-S is expected to increase due to additional steps/analysis/queries involved in MNP. This increase in processor load will vary based on solution opted & network traffic profile. Solution involving higher queries originating from MSC will have higher impact. For example, networks opting for B party IMSI in CDRs will have additional SRI from MSC. This will lead to increase in processor load.

Handling of LRN's: Pre-MNP, there is a direct correlation between MSISDN series & its network provider. When a subscriber makes an originating call to another mobile number, originating MSC analyses the B-number and if it belongs to own network then MSC routes the call to HLR. If the B-number belongs to other operators then MSC routes it to respective POI. Post MNP, calls to other networks needs to be routed based on LRNs. This may affect loading of links between MSC – GMSC or between GMSC-POI.

MNP Impact – YES

6 SUMMARY AND CONCLUSION

6.1 Summary of Achievements

After 4 months of research work in this field, I along with the Development team of Bharti and Ericsson came up with the proposed ACQ (All Call Query) solution for MNP implementation as its long term hardware, implementation and maintenance costs are low and configured the respective routing changes for Voice calls, SMS and other services which would be used post MNP implementation.

I had also conducted sample tests on Dummy numbers to check the health of signalling links in case of failure occurrence for 3 cases – Voice calls , SMS and MMS.

MNP implementation will have the following benefits once it is successfully through in late June 2010.

Benefits to subscribers:

- Better quality & bouquet of value-added services offered by any operator
- Competitive tariff package will be offered by all providers
- Survival of the most competent and promising providers in the market

Benefits to mobile network providers and the mobile industry:

- Updated technology and latest sophistication prevent stagnation of resource upgradation
- Healthy competition between providers

6.2 Main Difficulties encountered and how were they tackled

- During the initial phases, I had to equip myself with GSM concepts to develop my base as I was never aware about the details of this field of study. Post that, I was supposed to build my concepts on Number Portability and its various implementations as it was a new field of study.
- The coding process which was done through an Ericsson based tool called WINFIOL was hard to learn initially but with time I was able to accustom myself to it and fed in the codes to check the signalling process.
- During the Testing phases, many changes were made in Live traffic so that Real traffic was not affected in any way.

6.3 Future Scope of the work

There are still some issues which are yet to be handled by the service providers providing the Porting process before the final implementation process.
They are as under:

- Handset portability from GSM to CDMA type of networks.
- Complete Integration of NPDB between service providers.
- Query NPDB for every Mobile to Mobile call.
- CDR logic change as per billing requirements.
- Capacity and signalling impacts.
- Inter-operator agreements.

7 ABBREVIATIONS

AUC	Authentication Center
BAIC	Barring of All Incoming Calls
BAOC	Barring of All Outgoing Calls
BSC	Base Station Controller
BSS	Base Station Subsystem
BTS	Base Transceiver Station
CC	Call Control
CDMA	Code Division Multiple Access
CEPT	Conference of European Posts and Telecommunications
CFB	Call Forwarding on mobile subscriber Busy
CGI	Cell Global Identity
CM	Communication Management
CCN	Ericsson's Charging System (Prepaid and RTP)
CdPA	Called Party Address
CgPA	Calling Party Address
FNR	Flexible Numbering Register
MNP	Mobile Number Portability
NPDB	Number Portability Data Base
GIWU	GSM Interworking Unit
GMSC	GSM Mobile services Switching Center
GSM	Global System for Mobile communications
HLR	Home Location Register
IMEI	International Mobile Equipment Identity
IMSI	International Mobile Subscriber Identity
ISDN	Integrated Services Digital Network
LA	Location Area
LAI	Location Area Identity
MM	Mobility Management
MoU	Memorandum of Understanding
MS	Mobile Station
MSC	Mobile services Switching Center
MSISDN	Mobile Station ISDN number
MSRN	Mobile Station Roaming Number
NSS	Network and Switching Subsystem

OAM	Operation, Administration and Maintenance
OSS	Operation and Support Subsystem
PLMN	Public Land Mobile Network
PSPDN	Packet Switched Public Data Network
PSTN	Public Switched Telephone Network
SCF	Service Control Function (IN)
SDP	Service Data Point (IN)
SIM	Subscriber Identity Module
SMS	Short Message Services
SMS-CB	Short Message Services Cell Broadcast
SMS-MO/PP	Short Message Services Mobile Originating/Point-to-Point
SMS-MT/PP	Short Message Services Mobile Terminating/Point-to-Point
TDMA	Time Division Multiple Access
TMSI	Temporary Mobile Subscriber Identity
VAS	Value Added Services (IN)
VLR	Visitor Location Register

8 REFERENCES

[1]. ITU-T standardizations - http://www.itu.int/rec/T-REC-E.164-199811-I!Sup2/en

[2]. Analysis of Number Portability & Challenges in Implementation in India http://www.iimahd.ernet.in

[3]. Telecom regulatory Authority of India, www.trai.gov.in

[4]. Telecommunication Mobile Number Portability Regulations,2009 http://www.trai.gov.in/WriteReadData/trai/upload/Regulations/89/Regulation23sep09.pdf

[5]. John Scourias (University of Waterloo), 'Overview of the Global System for Mobile communications'. *http://ccnga.uwaterloo.ca/~jscouria/GSM/index.html*

[6]. Balston and Macario, 'An introduction to GSM' from the book 'Cellular Radio Systems', Published by Artech House.

[7]. Airtel MNP Solution overview EIL/KB-09:0143