NUCLEAR BATTERY

-Presented by
P.AKHIL

INTRODUCTION

A burgeoning need exists today for small, compact, reliable, lightweight and self-contained rugged power supplies to provide electrical power in such applications as electric automobiles, homes, industrial, agricultural, recreational, remote monitoring systems, spacecraft and deep-sea probes. Radar, advanced communications satellites and, especially, high-technology weapons platforms will require much larger power sources than today's space power systems can deliver. For the very high power applications, nuclear reactors appear to be the answer. However, for the intermediate power range, 10 to 100 kilowatts (KW), the nuclear reactor presents formidable technical problems.

Because of the short and unpredictable lifespan of chemical batteries, however, regular replacements would be required to keep these devices humming. Also, enough chemical fuel to provide 100 KW for any significant period of time would be too heavy and bulky for practical use. Fuel cells and solar cells require little maintenance, but the former are too expensive for such modest, low-power applications, and the latter need plenty of sun.

Thus the demand to exploit the radioactive energy has become inevitable high. Several methods have been developed for conversion of radioactive energy released during the decay of natural radioactive elements into electrical energy. A grapefruit-sized radioisotope thermo-electric generator that utilized the heat produced from alpha particles emitted as plutonium-238 decays was developed during the early 1950's.

Since then the nuclear power has taken a significant consideration in the energy source of future. Also, with the advancement of the technology the requirement for lasting energy sources has been increased to a great extent. The solution to the long term energy source is, of course, the nuclear batteries with a lifespan measured in decades and has the potential to be nearly 200 times more efficient than the currently used ordinary batteries. These incredibly long-lasting batteries are still in the theoretical and developmental stage of existence, but they promise to provide clean, safe, almost endless energy.

Unlike conventional nuclear power generating devices, these power cells does not rely on a nuclear reaction or chemical process and does not produce radioactive waste products. The nuclear battery technology is geared toward applications where power is needed in inaccessible places or under extreme conditions.

The researchers envision its uses in pacemakers and other medical devices that would otherwise require surgery to repair or replace. Additionally, deep-space probes and deep-sea sensors, which are beyond the reach of repair, would benefit from such technology. In the near future this technology is said to make its way into commonly used day to day products like mobile and laptops and even the smallest of the devices used at home. Surely these are the batteries of the near future.

HISTORICAL DEVELOPMENTS

The idea of nuclear battery was introduced in the beginning of 1950, and was patented on Mar 3, 1959 to Tracer lab. Even though the idea was given more than 30 years before no significant progress was made on the subject because the yield was very less.

A radioisotope electric power system developed by inventor Paul Brown was a scientific breakthrough in nuclear power. Brown's first prototype power cell produced 100,000times as much energy per gram of strontium-90 (the energy source) than the most powerful thermal battery yet in existence. The key to the nuclear battery is Brown's discovery of a method to harness the magnetic energy emitted by the alpha and beta particles inherent in nuclear material. Alpha and beta particles are produced by the radioactive decay of certain naturally occurring and man-made nuclear material (radio nuclides). The electric charges of the alpha and beta particles have been captured and converted to electricity for existing nuclear batteries, but the amount of power generated from such batteries has been very small.

Alpha and beta particles also possess kinetic energy by successive collisions of the particles with air molecules or other molecules. The bulk of the R&D of nuclear batteries in the past has been concerned with this heat energy which is readily observable and measurable. The magnetic energy given off by alpha and beta particles is several orders of magnitude greater than either the kinetic energy or the direct electric energy produced by these same particles. However, the myriads of tiny magnetic fields existing at any time cannot be individually recognized or measured. This energy is not captured locally in nature to produce heat or mechanical effects, but instead the energy escapes undetected.

Brown invented an approach to "organize" these magnetic fields so that the great amounts of otherwise unobservable energy could be harnessed. The first cell constructed (that melted the wire components) employed the most powerful source known, radium-226, as the energy source.

The main drawback of Mr. Brown’s prototype was its low efficiency, and the reason for that was when the radioactive material decays many of the electrons where lost from the semiconductor material. With the enhancement of more regular pitting and introduction of better fuels the Nuclear Batteries are thought to be the next generation batteries and there is hardly any doubt that these batteries will be available in stores within another decade.

ENERGY PRODUCTION MECHANISMS

Betavoltaics

Betavoltaics is an alternative energy technology that promises vastly extended battery life and power density over current technologies. Betavoltaics are generators of electrical current, in effect a form of battery, which use energy from a radioactive source emitting beta particles (electrons). The functioning of a betavoltaic device is somewhat similar to a solar panel, which converts photons (light) into electric current.

Betavoltaic technique uses a silicon wafer to capture electrons emitted by a radioactive gas, such as tritium. It is similar to the mechanics of converting sunlight into electricity in a solar panel. The flat silicon wafer is coated with a diode material to create a potential barrier. The radiation absorbed in the vicinity of any potential barrier like a p-n junction or a metal-semiconductor contact, would generate separate electron-hole pairs which in turn flow in an electric circuit due to the voltaic effect. Of course, this occurs to a varying degree in different materials and geometries.

A pictorial representation of a basic beta voltaic conversion is as shown in Figure 1. Electrode A (P-region) has a positive potential while electrode B (N-region) is negative with the potential difference provided by any conventional means.

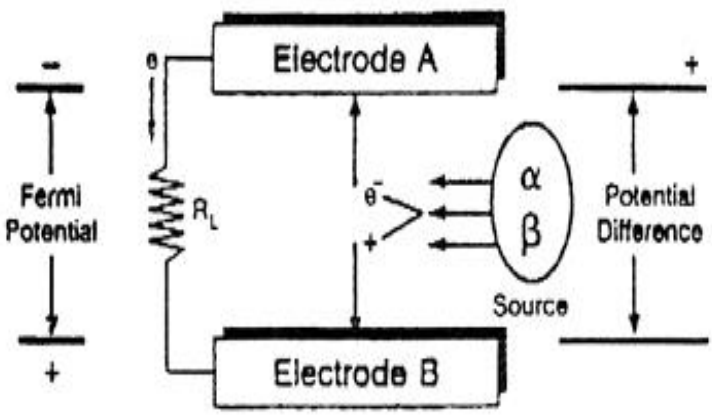

Figure 1

The junction between the two electrodes is comprised of a suitably ionisable medium exposed to decay particles emitted from a radioactive source.

The energy conversion mechanism for this arrangement involves energy flow in different stages:

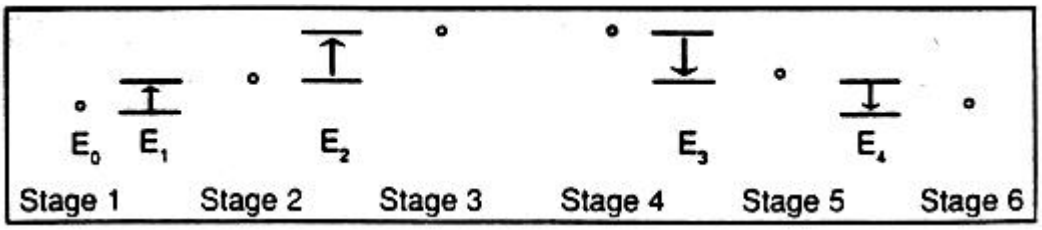

Figure 2

Stage 1 ~ Before the radioactive source is introduced, a difference in potential between two electrodes is provided by any conventional means. An electric load R_L is connected across the electrodes A and B. Although a potential difference exists, no current flows through the load RL because the electrical forces are in equilibrium and no energy comes out of the system. We shall call this the ground state Eo.

Stage 2 ~ Next, we introduce the radioactive source, say a beta emitter, to the system. Now, the energy of the beta particle E_B generates electron-hole pairs in the junction by imparting kinetic energy which knocks electrons out of the neutral atoms. This amount of energy, E_1, is known as the ionization potential of the junction.

Stage 3 ~ Further the beta particle imparts an amount of energy in excess of the ionization potential. This additional energy raises the electron energy to an elevated level E_2. Of course the beta particle does not impart its energy to a single ion pair, but a single beta particle will generate as many as thousands of electron-hole pairs. The total number of ions per unit volume of the junction is dependent upon the junction material.

Stage 4 ~ Next, the electric field present in the junction acts on the ions and drives the electrons into electrode A. the electrodes collected in electrode A together with the electron deficiency of electrode B establishes a Fermi Voltage between the electrodes. Naturally, the electrons in electrode A seek to give up their energy and go back to their ground state (Law of Entropy).

Stage 5 ~ The Fermi Voltage drives electrons from the electrode A through the load where they give up their energy in accordance with conventional electrical theory. A voltage drop occurs across the load as the electrons give up an amount of energy E_3. Then the amount of energy available to be removed from the system is

$E_3 = E_B - E_1 - L_1 - L_2$

Where L_1 is the converter losses and L_2 is the losses in the electrical circuit.

Stage 6 ~ the electrons, after passing through the load have an amount of energy E_4. From the load, the electron is then driven into the electrode B where it is allowed to recombine with a junction ion, releasing the recombination energy E_4 in the form of heat. This completes the circuit and the electron has returned to its original ground state.

The end result is that the radioactive source acts as a constant current generator. Then the energy balance equation can be written as

$E_0 = E_B - E_1 - E_3 - L_1 - L_2$

Until now, Betavoltaics has been unable to match solar-cell efficiency. The reason is simple: When the gas decays, its electrons shoot out in all directions. Many of them are lost. A new betavoltaic device using porous silicon diodes was proposed to increase their efficiency. The flat silicon surface, where the electrons are captured and converted to a current, and turned it into a three-dimensional surface by adding deep pits. Each pit is about 1 micron wide. That's four hundred-thousandths of an inch. They're more than 40 microns deep. When the radioactive gas occupies these pits, it creates the maximum opportunity for harnessing the reaction.

Direct charging generators

In this type, the primary generator consists of a high-Q LC tank circuit. The energy imparted to radioactive decay products during the spontaneous disintegrations of radioactive material is utilized to sustain and amplify the oscillations in the high-Q LC tank circuit. The circuit inductance comprises a coil wound on a core composed of radioactive nuclides connected in series with the primary winding of a power transformer. The core is fabricated from a mixture of three radioactive materials which decay primarily by alpha emission and provides a greater flux of radioactive decay products than the equivalent amount of a single radioactive nuclide.

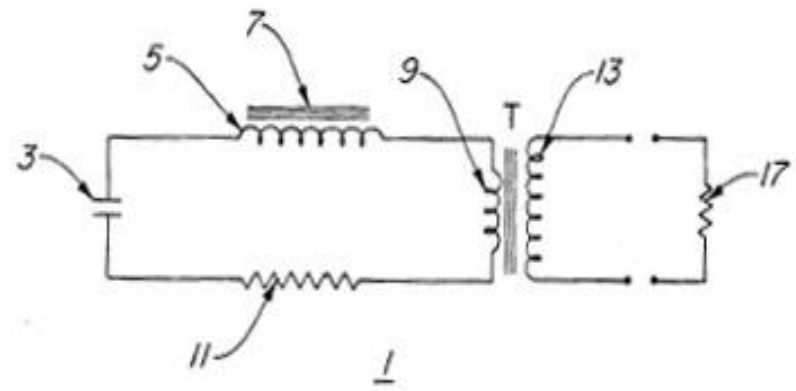

Figure 3 is a schematic diagram of an LC equivalent resonant circuit

Equitant circuit of the direct charging generator is as shown in the figure 3. An LCR circuit 1 is comprised of a capacitor 3, inductor 5, transformer T primary winding 9 and resistance 11 connected in series. It is assumed that the electrical conductors connecting the various circuit elements and forming the inductor 5 and primary winding 9 are perfect conductors; i.e., no DC resistance. Resistor 11 is a lump resistance equivalent to the total DC resistance of the actual circuit components and conductors. The inductor 5 is wound on a core 7 which is composed of a mixture of radioactive elements decaying primarily by alpha particle emission.

When current flows in electrical circuit energy is dissipated or lost in the form of heat. Thus, when oscillations are induced in an LCR circuit, the oscillations will gradually damp out due to the loss of energy in the circuit unless energy is continuously added to the circuit to sustain the oscillations. In the LCR circuit shown in Figure 3, a portion of the energy imparted to the decay products, such as alpha particles, during the radioactive decay of the materials making up inductor core 7 is introduced into the circuit 1 when the decay products are absorbed by the conductor which forms inductor 5. Once oscillations have been induced in the LCR circuit 1, the energy absorbed by inductor 5 from the radioactive decay of the core 7 materials will sustain the oscillations as long as the amount of energy absorbed is equal to the amount of energy dissipated in the ohmic resistance of the circuit 1. If the absorbed energy is greater than the amount of energy lost through ohmic heating, the oscillations will be amplified. This excess energy can be delivered to a load 17 connected across the transformer T secondary winding 13.

The processes involved in the conversion of the energy released by the spontaneous disintegration of a radioactive material into electrical energy are numerous and complex. Materials that are naturally radioactive decay by the emission of either an alpha particle or a beta particle, and gamma rays may accompany either process. Radioactive materials that decay primarily by alpha particle emission are preferred as the inductor core 7 material. Alpha particles are emitted at very high speeds, in the order of $1.6X10^7$ meters per second (m/s), and, consequently, have very high kinetic energy. Alpha particles emitted when radium, for example, decays are found to consist of two groups, those with a kinetic energy of $48.79X10^5$ electron volts (eV) and those having energy of $46.95X10^5$ eV. This kinetic energy must be dissipated when the alpha particles are absorbed by the conductor forming inductor 5. During the absorption process, each alpha particle will collide with one or more atoms in the conductor knocking electrons from their orbits and imparting some kinetic energy to the electrons. This results in increased numbers of conduction electrons in the conductor thereby increasing its conductivity.

Since the alpha particle is a positively charged ion, while the alpha particle is moving it will have an associated magnetic field. When the alpha particle is stopped by the conductor, the magnetic field will collapse thereby inducing a pulse of current in the conductor producing a net increase in the current flowing in the circuit 1. Also, there will be additional electrons stripped from orbit due to ionization produced by the positively charged alpha particles.

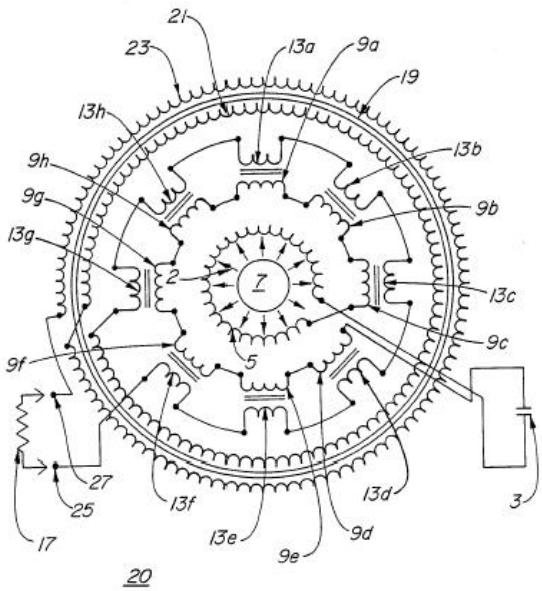

Figure 4 is a wiring diagram of a constructed nuclear battery

Referring to Figure 4, the nuclear battery is constructed in a cylindrical configuration. Inductor 5 is constructed of copper wire wound in a single layer around the radioactive core 7. Decay products, such as alpha particles, are emitted radially outward from the core 7 as indicated by arrows 2 to be absorbed by the copper conductor forming inductor 5. Eight transformers 15 are arranged in a circular pattern to form a cylinder concentric with and surrounding inductor 5. The transformers 15 have primary windings 9a-9h connected in series which are then connected in series with inductor 5 and capacitor 3 to form an LCR circuit. The central core 7, inductor 5 and the eight transformers 15 are positioned within a cylindrical-shaped container 19. Copper wire is wound in a single layer on the outside wall and the inside wall of cylinder 19 to form windings 23 and 21 respectively. The transformers 15 secondary windings 13a-13h and windings 21 and 23 are connected in series to output terminals 25 and 27. The configuration of inductor 5 is designed to insure maximum irradiation of the copper conductor by the radioactive core source 7. The cylindrical configuration of the power transformer ensures maximum transformer efficiency with minimum magnetic flux leakage.

Optoelectric

An Optoelectric nuclear battery has also been proposed by researchers of the Kurchatov Institute in Moscow. A beta-emitter such as technetium-99 or strontium-90 is suspended in a gas or liquid containing luminescent gas molecules of the excimer type, constituting “dust plasma”. This permits a nearly lossless emission of beta electrons from the emitting dust particles for excitation of the gases whose excimer line is selected for the conversion of the radioactivity into a surrounding photovoltaic layer such that a comparably light weight low pressure, high efficiency battery can be realised. These nuclides are low cost radioactive waste of nuclear power reactors. The diameter of the dust particles is so small (few micrometers) that the electrons from the beta decay leave the dust particles nearly without loss. The surrounding weakly ionized plasma consists of gases or gas mixtures (e.g. krypton, argon, xenon) with excimer lines, such that a considerable amount of the energy of the beta electrons is converted into this light. The surrounding walls contain photovoltaic layers with wide forbidden zones as egg. Diamond which converts the optical energy generated from the radiation into electric energy.

The battery would consist of an excimer of argon, xenon, or krypton (or a mixture of two or three of them) in a pressure vessel with an internal mirrored surface, finely-ground radioisotope, and an intermittent ultrasonic stirrer, illuminating a photocell with a band gap tuned for the excimer. When the electrons of the beta active nuclides (e.g. krypton-85 or argon-39) are excited, in the narrow excimer band at a minimum of thermal losses, the radiations so obtained is converted into electricity in a high band gap photovoltaic layer (e.g. in p-n diamond) very efficiently. The electric power per weight compared with existing radionuclide batteries can then be increased by a factor 10 to 50 and more. If the pressure-vessel is carbon fiber/epoxy the weight to power ratio is said to be comparable to an air-breathing engine with fuel tanks. The advantage of this design is that precision electrode assemblies are not needed, and most beta particles escape the finely-divided bulk material to contribute to the battery's net power. The disadvantage consists in the high price of the radionuclide and in the high pressure of up to 10 MPa (100 bar) and more for the gas that requires an expensive and heavy container.

FUEL CONSIDERATIONS

The major criterions considered in the selection of fuels are:

- Avoidance of gamma in the decay chain
- Half-Life
- Particle range
- Watch out for (alpha, n) reactions

Any radioisotope in the form of a solid that gives off alpha or beta particles can be utilized in the nuclear battery. The first cell constructed (that melted the wire components) employed the most powerful source known, radium-226, as the energy source. However, radium 226 gives rise through decay to the daughter product bismuth-214, which gives off strong gamma radiation that requires shielding for safety. This adds a weight penalty in mobile applications.

Radium-226 is a naturally occurring isotope which is formed very slowly by the decay of uranim-238. Radium-226 in equilibrium is present at about 1 gram per 3 million grams of uranium in the earth's crust. Uranium mill wastes are a readily available source of radium-226 in very abundant quantities. Uranium mill wastes contain far more energy in the radium-226 than is represented by the fission energy derived from the produced uranium.

Strontium-90 gives off no gamma radiation so it does not necessitate the use of thick lead shielding for safety. Strontium-90 does not exist in nature, but it is one of the several radioactive waste products resulting from nuclear fission. The utilizable energy from strontium-90 substantially exceeds the energy derived from the nuclear fission which gave rise to this isotope.

Once the present stores of nuclear wastes have been mined, the future supplies of strontium-90 will depend on the amount of nuclear electricity generated. Hence strontium-90 decay may ultimately become a premium fuel for such special uses as for perpetually powered wheel chairs and portable computers. Plutonium-238 dioxide is used for space application. Half-life of Tantalum180m is about 10^{15} years. In its ground state, tantalum-180 (180Ta) is very unstable and decays to other nuclei in about 8 hours but its isomeric state, 180mTa, is found in natural samples. Tantalum180m hence can be used for switchable nuclear batteries

ADVANTAGES

The most important feat of nuclear cells is the life span they offer, a minimum of 10 years! This is whopping when considered that it provides non-stop electric energy for the entire seconds spanning these 10 long years, which may simply mean that you may keep your laptop or PDA switched-on for 10 years non-stop. Contrary to fears associated with conventional batteries, nuclear cells offers reliable electric, without any drop in the yield or potential during its entire operational period. Thus the longevity and reliability coupled together would suffice the small from factored energy needs for at least a couple of decades.

The largest concern of nuclear batteries comes from the fact that it involves the use of radioactive materials. This means throughout the process of making a nuclear battery to final disposal all Radiation Protection Standards must be met. Balancing the safety measures such as shielding and regulation while still keeping the size and power advantages will determine the economic feasibility of nuclear batteries. Safeties with respect to the containers are also adequately taken care as the battery cases are hermetically sealed. Thus the risk of safety hazards involving radioactive materials stands reduced.

As the energy associated with fissile material is several times than conventional energy sources, and is by far the highest, the cells are comparatively much lighter and thus facilitates high energy densities to be achieved. Similarly, the efficiency of such cells is much higher simply because radioactive materials involve little waste generation. Thus substituting the future energy needs with nuclear cells and replacing the already existing ones with these, the world can be seen transformed into a new one by reducing the green house effects and associated risks. This should come as a handy saviour for almost all developed and developing nations worldwide. More over the nuclear waste produced there in are substances that don't occur naturally. For example, Strontium-90 does not exist in nature, but it is one of the several radioactive waste products resulting from nuclear fission.

APPLICATIONS

Nuclear batteries find manifold applications due to its long life time and improved reliability. In the ensuing era, the replacing of conventional chemical batteries will be of enormous advantages. This innovative technology will surely bring break-through in the current technology which was muddled up in the power limitations.

Space applications:

In space applications, nuclear power units offer advantages over solar cells, fuel cells and ordinary batteries because of the following circumstances:

1. When the satellite orbits pass through radiation belts such as the Van-Allen belts aroound the Earth that could destroy the solar cells.
2. Operations on the moon or Mars where long periods of darkness require heavy batteries to supply power when solar cells would not have access to sun light.
3. Space missions in opaque atmospheres such as Venus, where solar cells would be useless because of lack of light.
4. At distances far from the Sun, for long duration missions where fuel cells, batteries and solar arrays would be too large and heavy.
5. Heating the electronics and storage batteries in the deep cold of space at minus 245 degrees Fahrenheit is a necessity.

So in the future it is ensured that these nuclear batteries will replace all the existing power supplies due to its incredible advantages over the other. The applications which require a high power, a high life time, a compact design over the density, an atmospheric conditions-independent ,it's quite a sure shot that the future will be of 'Nuclear Batteries'. NASA is on the hot pursuit of harnessing this technology in space applications.

Medical Applications:

The medical field finds lot applications with the nuclear battery due to their increased longevity and better reliability. It would be suited for medical devices like pacemakers, implanted defibrillators, or other implanted devices that would otherwise require surgery to replace or repair The best out of the box is the use in 'cardiac pacemakers'. Batteries used in Implantable cardiac pacemakers-present unique challenges to their developers and manufacturers in terms of high levels of safety and reliability and it often pauses threat to the end-customer. In addition, the batteries must have longevity to avoid frequent replacements. Technological advances in leads/electrodes have reduced energy requirements by two orders of magnitude. Microelectronics advances sharply reduce internal current drain concurrently decreasing size and increasing functionality, reliability, and longevity. It is reported that about 600,000 pacemakers are implanted each year worldwide and the total number of people with various types of implanted pacemaker has already crossed 3 million. A cardiac pacemaker uses half of its battery power for cardiac stimulation and the other half for housekeeping tasks such as monitoring and data logging. The first implanted cardiac pacemaker used nickel-cadmium rechargeable battery, later on zinc-mercury battery was developed and used which lasted for over 2 years. Lithium iodine battery, developed in1972 made the real impact to implantable cardiac pacemakers and is on the way. But it draws the serious threat that this battery lasts only for about 10 years and this is a serious problem. The lifetime solution for the life is nuclear battery.

Nuclear battery are the best reliable and it lasts a lifetime. The definitions for some of the important parts of a battery and its performance are parameters like voltage, duty cycle, temperature, shelf life, service life, safety and reliability, internal resistance, specific energy (watt-hours/kg), specific power (watts/kg), and in all that means nuclear batteries stands out. The technical advantages of nuclear battery are in terms of its longevity, adaptable shapes and sizes, corrosion resistance, minimum weight, excellent current drain that suits to cardiac pacemakers.

Mobile devices:

Xcell-N is a nuclear powered laptop battery that can provide between seven and eight thousand times the life of a normal laptop battery - that's more than five years worth of continuous power.

Nuclear batteries are about forgetting things around the usual charging, battery replacing and such bottlenecks. Since Chemical batteries are just near the end of their life, we can't expect much more from them. In its lowest accounts, a nuclear battery can endure at least up to 5 years. The Xcell-N is in continuous working for the last 8 months and has not been turned off and has never been plugged into electrical power since new. Nuclear batteries are going to replace the conventional batteries and adapters, so the future will be of exciting innovative new approach to powering portable devices.

Automobiles:

Although it's on the initial stages of development, it is highly promised that nuclear batteries will find a sure niche in the automobiles replacing the weary convent ionic fuels. There will be no case such as running short of fuel and running short of time.' Fox Valley Electric Auto Association, USA' already conducted many seminars on the scopes and they are on the way of implementing this. Although the risks associated with the usage of nuclear battery, even concerned with legal restrictions are of many, but its advantages over the usual gasoline fuels are overcoming all the obstacles.

Military applications:

The Army is undertaking a transformation into a more responsive, deployable, and sustainable force, while maintaining high levels of lethality, survivability, and versatility.

In unveiling this strategy, the final resource that fit quite beneficial is 'Nuclear Battery'.

'TRACE Photonics, *U.S. Army Armaments Research, Development & Engineering centre'* has harnessed radioisotope power sources to provide very high energy density battery power to the war fighter. Nuclear batteries are much lighter than chemical batteries and will last years, even decades. No power cords or transformers will be needed for the next generation of microelectronics in which voltage-matched supplies are built into components. Safe, long-life, reliable, and stable temperature power is available from the direct conversion of radioactive decay energy to electricity. This distributed energy source is well-suited to active radio frequency equipment tags, sensors, and ultra wide- band communications chips used on the modern battlefield.

Under water sea probes and sea sensors

The recent flare-up of Tsunami, earth-quakes and other underwater destructive phenomenon has increased the demand for sensors that keeps working for a long time and able to withstand any crude situations. Since these batteries are geared towards applications where power is needed in inaccessible places or under extreme conditions, the researchers envision its use as deep-sea probes and sea sensors, sub-surface, coal mines and polar sensor applications, with a focus on the oil industry

And the next step is to adapt the technology for use in very tiny batteries that could power micro-electro-mechanical Systems (MEMS) devices, such as those used in optical switches or the free-floating "smart dust" sensors being developed by the military.

DRAWBACKS

First and foremost, as is the case with most breath taking technologies, the high initial cost of production involved is a drawback. But as the product goes operational and gets into bulk production, the price is sure to drop. The size of nuclear batteries for certain specific applications may cause problems, but can be done away with as time goes by. For example, size of Xcell used for laptop battery is much more than the conventional battery used in the laptops.

Though radioactive materials sport high efficiency, the conversion methodologies used presently are not much of any wonder and at the best matches' conventional energy sources. However, laboratory results have yielded much higher efficiencies, but are yet to be released in to the alpha stage.

A minor blow may come in the way of existing regional and country-specific laws regarding the use and disposal of radioactive materials. As these are not unique worldwide and are subject to political horrors and ideology prevalent in a country, the introduction legally requires these to be scrapped or amended. It can be however hoped that, given the revolutionary importance of this substance, things would come in favour gradually.

Above all, to gain social acceptance, a new technology must be beneficial and demonstrate enough trouble free operation that people begin to see it as a "normal" phenomenon. Nuclear energy began to lose this status following a series of major accidents in its formative years. Acceptance accorded to nuclear power should be trust-based rather than technology based. In other words, acceptance might be related to public trust of the organizations and individuals utilizing the technology as opposed to based on understanding of the available evidence regarding the technology.

CONCLUSION

The world of tomorrow that science fiction dreams of and technology manifests might be a very small one. It would reason that small devices would need small batteries to power them. The use of power as heat and electricity from radioisotope will continue to be indispensable. Microelectronics advances sharply reduce internal current drain concurrently decreasing size and increasing functionality, reliability, and longevity. As technology grows, the need for more power and more heat will undoubtedly grow along with it.

Clearly the current research of nuclear batteries shows promise in future applications for sure. With implementation of this new technology credibility and feasibility of the device will be heightened. The principal concern of nuclear batteries comes from the fact that it involves the use of radioactive materials. This means throughout the process of making a nuclear battery to final disposal all Radiation Protection Standards must be met. The economic feasibility of nuclear batteries will be determined by its applications and advantages. With several features being added to this little wonder and other parallel laboratory works going on, nuclear cells are going to be next best thing ever discovered in the human history.

REFERENCE

- "*Power from Radioisotopes*," *USAEC, Division of Technical Information*
- "*Nuclear and Radiochemistry*" , Gerhart Friedlander, Joseph W. Kennedy and Julian Malcolm Miller,
- "*Particles and Nuclei, An Introduction to the Physical Concepts*", B. Povh, K. Rith, C. Scholz, and F. Zetche,
- Wikipedia.com/atomic_battery
- Technologyreview.com
- Powerpaper.com
- Powerstream.com, "*The Role of Chemical Power Sources in Modern Health Care*", Curtis F. Holmes,
- Sciencedaily.com/nukebattery