CHAPTER – 1

INTRODUCTION

1. INTRODUCTION

A solar vehicle is an electric vehicle powered by a type of renewable energy, (by solar energy obtained from solar panels on the surface (generally, the roof) of the vehicle). Photovoltaic (PV) cells convert the Sun's energy directly into electrical energy. The design of a solar vehicle is severely limited by the energy input into the car (batteries and power from the sun).

The electrical system is the most important part of the car's systems as it controls all of the power that comes into and leaves the system. The battery pack plays the same role in a solar car that a petrol tank plays in a normal car in storing power for future use. Solar cars use a range of batteries including lead-acid batteries, nickel-metal hydride batteries (NiMH), Nickel-Cadmium batteries (NiCd), Lithium ion batteries.

PRINCIPLE OF OPERATION

Solar cars are powered by the sun's energy. The main component of a solar car is its solar array, which collect the energy from the sun and converts it into usable electrical energy. The solar cells collect a portion of the sun's energy and store it into the batteries of the solar car. Before that happens, power trackers converts the energy collected from the solar array to the proper system voltage, so that the batteries and the motor can use it. After the energy is stored in the batteries, it is available for use by the motor & motor controller to drive the car. The motor controller adjusts the amount of energy that flows to the motor to correspond to the throttle. The motor uses that energy to drive the wheels.

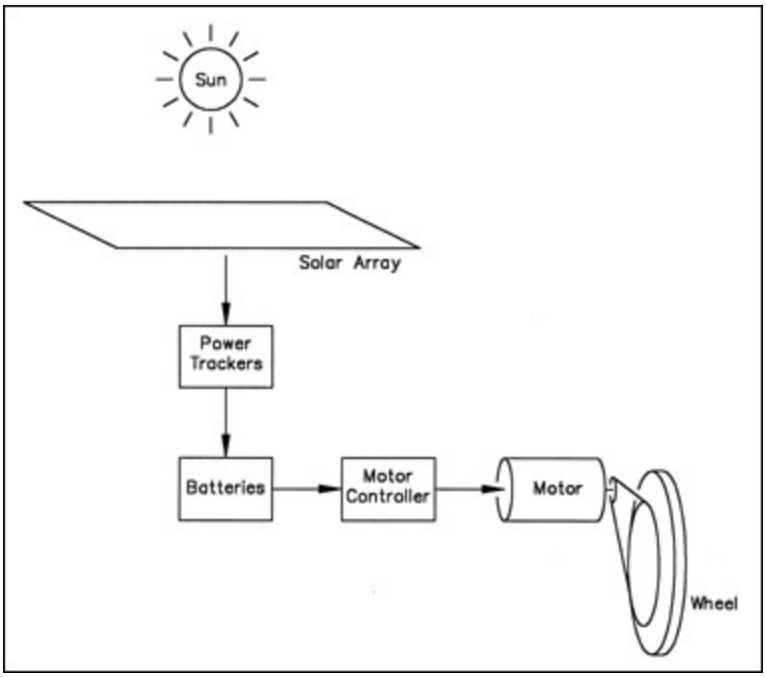

CHAPTER – 2

GENERAL DESCRITION

2. GENERAL DESCRIPTION

Solar powered multi utility vehicle(SPMUV) is driven by high powered motor which is powered by batteries charged by solar cells. The solar cell modules can be attached and detached from the SPMUV. An area of 2.56m^2 has been provided for carrying the load as the main purpose is to carry the loads in the workshops.

The curb weight of the SPMUV is 397kgs and can pull a load of about 500kgs. The speed at which it can run varies inversely with the load carried by it. By varying the voltage and current of the motor the speed, torque, power of the motor can be fluctuated according to the necessity.

The SPMUV needs to be charged for 5 hours in order to attain complete charge of the batteries. The additional area provided at the rear side for the solar cells will help in attracting more sunlight consequently delivering more power. It can run for about 50kms under fully charged condition. In case of a cloudy day or during the nights, the batteries can be charged through regular AC supply.

The SPMUV is mainly designed for the use in local premises i.e. in industries, workshops, college campuses etc. Utility vehicles of this sort will be greatly useful in carrying the load from one place to other, transporting material to their destination.

CHAPTER – 3

CHANGES MADE

3. CHANGES MADE

The need for remodeling the SPMUV rose as the following points have been observed as drawbacks in the previous SPMUV.

1. Weight of the vehicle is enormous.
2. Unplanned design of chassis.
3. Improper load distribution.
4. Use of bulky material at unwanted regions.

Due to the above reasons the previous designed vehicle was moving at extremely low speed, bowed towards the front of the vehicle.

In order to overcome these drawbacks a new plan has been designed for the successful running of SPMUV.

The major changes that are made are,

1. Chassis design
2. material used
3. altered front suspension system
4. Increased area for solar panels.
5. Increased area for accommodating load.

Chassis has been designed and thoroughly revised keeping in mind of the load distribution, using the space effectively for load,

The material used for the construction of SPMUV consists of different dimension at different places according to the requirement. For the places of that do not undergo heavy stress a material of low thickness has been used and for the places that undergo good amount of stress a considerably more thickness has been used. The material selection has been done after a thorough compression and hardness tests.

The suspension system at the front side of SPMUV has been altered from leaf spring to McPherson type. This change has been made mainly to as it is a much simpler system, gives much space, keeping the unsprung weight lower.

The area for the solar panels has been greatly increased by providing an area of $3.72m^2$ at top accommodating 4 panels. Placing the panels on the top, more amount of solar power can be captured.

As the main aim of SPMUV is to carry load, a vast space at the rear side has been provided for carrying the load.

CHAPTER – 4

SPECIFICATIONS

4. SPECIFICATIONS

DIMENSIONS	VALUE
Length (mm)	3300
Width (mm)	1440
Height (mm)	1770
Wheelbase (mm)	2070
Front Track (mm)	1020
Rear Track (mm)	1180
Minimum Turning Radius (m)	4.4
Minimum Ground Clearance (mm)	200
WEIGHT	
Kerb Weight (Kg)	397
Gross Vehicle Weight (Kg)	937
CAPACITY	
Seating capacity	2
Loading capacity area (m^2)	2.56
Load capacity (kgs)	500
MOTOR	
Torque (N-m)	24
Power (HP)	8.05
Speed (RPM)	2600
Voltage (V)	48
Current (A)	150
TRANSMISSION	

Type	rear wheel drive

BATTERY

Current (A)	150
Voltage (V)	12

STEERING

Type	Rack and Pinion

SUSPENSION SYSTEM

Front	McPherson struts and coil spring
Rear	leaf springs

BRAKES

Front	Disc
Rear	Drum

TYRES

Tyre specification	145/70 R12 69T

CHAPTER – 5

FEATURES OF SPMUV

5. FEATURES OF SPMUV

The SPMUV has unique features compared to the other vehicles.

The features of SPMUV are as follows:

1. It is an eco-friendly vehicle.
2. It has no running cost.
3. It does not produce any noise pollution due to the absence of engine.
4. The speed can be modified as per the requirement just by simple switch mechanism.
5. It is a minimal maintenance vehicle. Does not need maintenance cost also.
6. Delivers high power with absolutely no pollution.
7. Batteries can be charged even while running through panels.

Though the use of the battery operated vehicles has increased, the use of solar powered vehicles is very less. It is known fact that there is a shortage for the electricity in countries like India.

As there is a very less production of fuels, petrol cannot be afforded to use. So the use of available renewable energy like solar energy should be made to save the little electricity and petrol that we have.

CHAPTER – 6

PLAN OF THE PROJECT

6. PLAN OF THE PROJECT

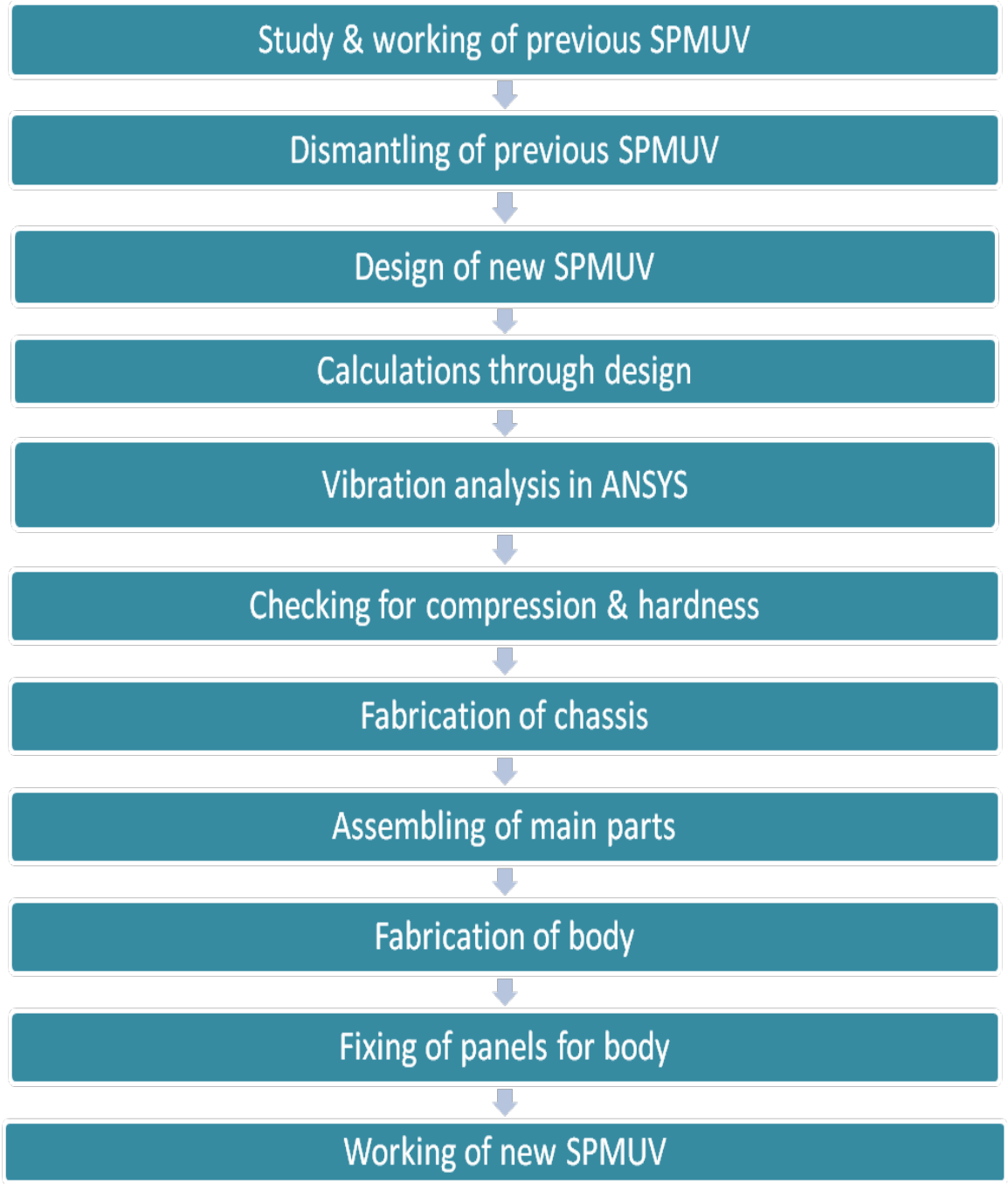
Study & working of previous SPMUV
Dismantling of previous SPMUV
Design of new SPMUV
Calculations through design
Vibration analysis in ANSYS
Checking for compression & hardness
Fabrication of chassis
Assembling of main parts
Fabrication of body
Fixing of panels for body
Working of new SPMUV

CHAPTER – 7

DESIGN & FABRICATION

7.1 CHASSIS

The chassis of the SPMUV is made up of MS bars. The SPMUV is 3300mm long and 1440mm wide. The chassis is specially designed to endure heavy loads as it is a load

carrying vehicle. The chassis was initially designed using IRONCAD software and later has been fabricated according to the design.

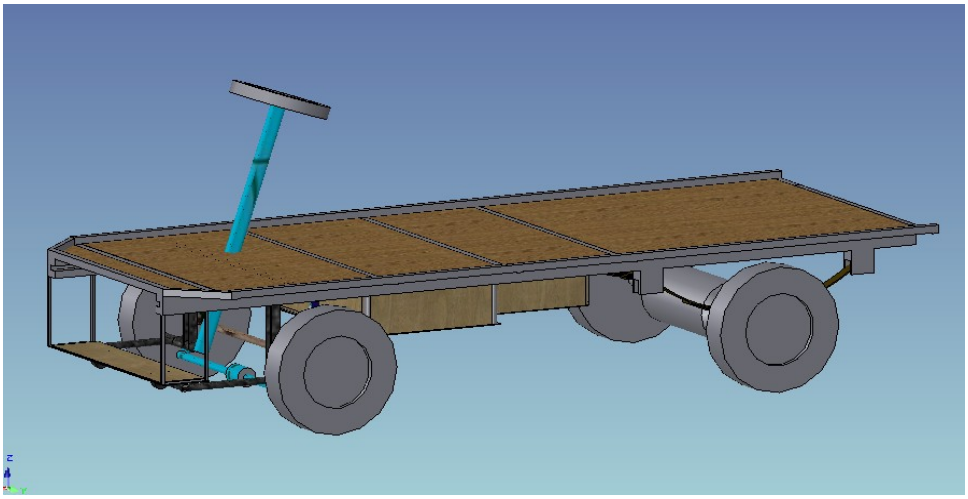

The above figure shows the designed model of the chassis in IRONCAD. For the load to be distributed enough space has been provided for the batteries, and space for extra tyre and tools has been provided at the bottom. They are inserted to the bottom through an opening at the top. There is a door provided on the base through which the batteries can be taken out. Right angular bars are used in this space for a rigid support of batteries.

There are two main 'C' sections used of dimensions (40*75*40) mm^3 with 4mm thickness and other 'C' sections are of the dimensions (30*30*30) mm^3 with 3mm thickness. The material chosen has been confidently used for the construction after testing it for compression and hardness tests. All these rods are connected to one another by welding.

WELDING SPECIFICATIONS

Type – Arc welding

Current - 5000-6000 °C

Electrode- 10 gauge, 3.15mm diameter Mild Steel rods.

According to I.S. 2879-1975 the Mild Steel electrode core wires have the following % of elements in the composition.

Carbon 0.1%

Silicon 0.03%

Manganese	0.38% to 0.62%
Sulphur	0.03%
Phosphorus	0.03%
Copper	0.15%
Iron	remaining %

For the base of the chassis, plywood sheet of 12mm thickness has been used and inserted at different sections for the easy removal and placing. To avoid incongruous elevations the sectors of the plywood sheets have been chiseled and placed into the chassis as the sheet has to go along with the thickness of the horizontal rods that have been placed for support. Plywood sheets act as insulation to the electrical shocks also.

7.2 BODY

The frame for the body of the SPMUV is made of mild steels bar 'C' sections of dimension 30*30*30 mm^3 and with a thickness of 2mm. Four rods at the backside of

1100mm height, two rods at the front side of height 1000mm have been fabricated. With the help of these two dissimilar rods a provision for a transparent glass has been provided for the driver to see through it and protect the driver from winds, dust.

On the top, 4 solar panels of size 1618*808 mm^2 have been placed. The body is so designed that it can accommodate two people (including the driver) at the front and a sufficient area of 2.56 mm^2 for the goods.

CHAPTER – 8

MECHANISMS

8.1 DIFFERENTIAL

In automobiles and other wheeled vehicles, a differential is a device consisting of gears, which allows each of the driving wheels to rotate at different speeds, while supplying

equal torque to each of them. In one way, it receives one input and provides two outputs; this is found in most automobiles. In the other way, it combines two inputs to create an output that is the sum, difference, or average, of the inputs.

Purpose:

A vehicle's wheels rotate at different speeds, especially when turning corners. The differential is designed to drive a pair of wheels with equal force while allowing them to rotate at different speeds. In vehicles without a differential, such as karts, both driving wheels are forced to rotate at the same speed, usually on a common axle driven by a simple chain drive mechanism. When cornering, the inner wheel travels a shorter distance than the outer wheel, resulting in the inner wheel spinning and/or the outer wheel dragging. This results in, difficult and unpredictable handling, damage to tires and roads, and strain on (or possible failure of) the entire drive train.

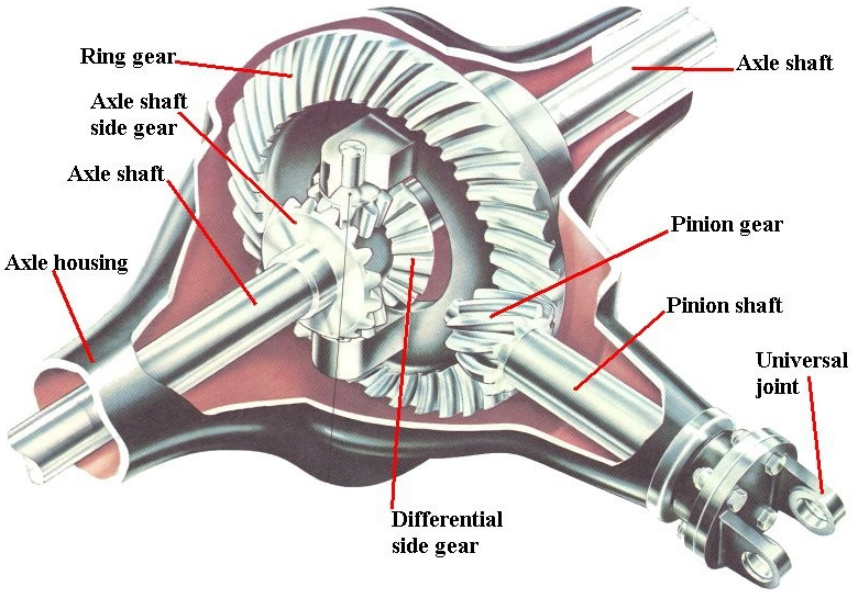

The differential has three jobs:

1. To transmit the engine power to the wheels.

2. To act as the final gear reduction in the vehicle, slowing the rotational speed of the transmission one final time before it hits the wheels.
3. To transmit the power to the wheels while allowing them to rotate at different speeds (This is the one that earned the differential its name.)

Functional Description:

Power is supplied from the engine, via the transmission, to the differential shaft. A pinion gear at the end of the propeller shaft is encased within the differential itself, and it engages with the large ring gear. The ring gear is attached to carrier, which holds a set of three small planetary gears. The three planetary gears are set up in such a way that the two outer gears (the side gears) can rotate in opposite directions relative to each other. The pair of side gears drive the axle shafts to each of the wheels. The entire carrier direction as the ring gear, but within that motion, the side gears can counter rotate relative to each other.

When the vehicle is traveling in a straight line, there will be no differential movement of the planetary system of gears other than the minute movements necessary to compensate for slight differences in wheel diameter, undulations in the road, etc. [3]

8.2 BRAKES

A **brake** is a device for slowing or stopping the motion of a machine or vehicle, or alternatively a device to restrain it from starting to move again. This is done by

converting kinetic energy of the vehicle into the heat energy which is dissipated into the atmosphere. In SPMUV Disc brakes are used for the front wheels and Drum brakes are used for the rear wheels.

Braking Requirements:

1. The brakes must be strong enough to stop the vehicle within a minimum distance in an emergency. The driver should have proper control over the vehicle during emergency braking and the vehicle must not skid.

2. The brakes must have good anti-fade characteristics i.e. their effectiveness should not decrease with constant prolonged application e.g. while descending hills.

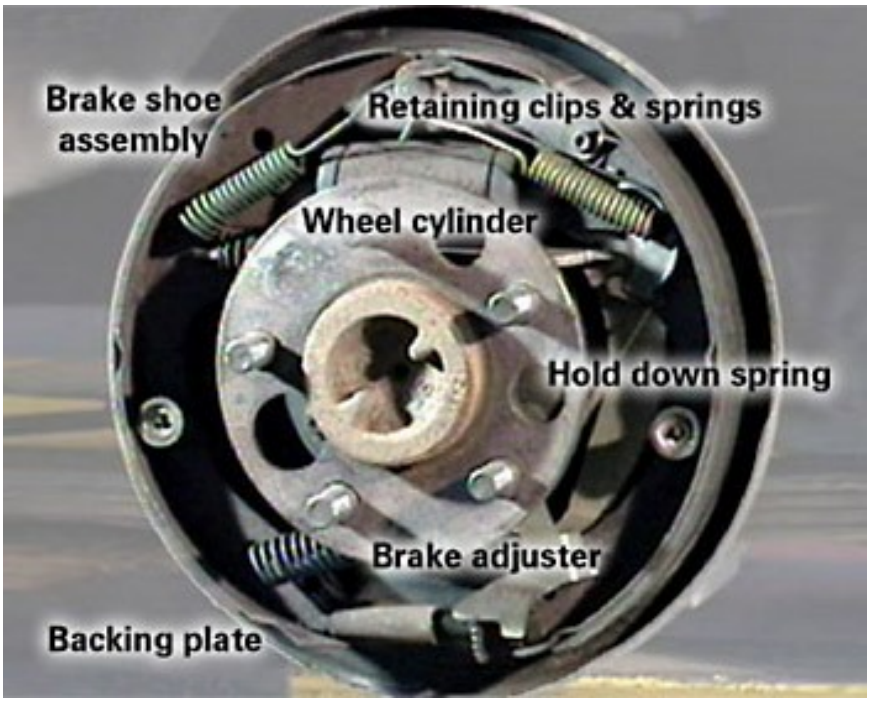

Functional Description of drum brakes:

A brake drum is attached concentric to the axle hub whereas on the axle casing is mounted a back plate. A back plate is bolted to the steering knuckle. The back plate is made of pressed steel sheet and is ribbed to increase rigidity and to provide support for the expander, anchor and brake shoes. It also protects the drum and shoe assembly from mud and dust. Moreover, it absorbs the complete torque reaction of the shoes due to which it is sometimes called ‘torque plate’.

Two brake shoes are anchored on the back plate. Friction linings are mounted on the brake shoes. A reactive spring is used which serves to keep the brake shoes away from the drum when the brakes are not applied. The brake shoes are anchored at one end, whereas on the other ends force F is applied by means of some brake actuating mechanism, which forces the brake against the revolving drum, thereby applying the brakes. [9]

Nomenclature

F = Applied Force (N)
P = Brake Power kW
T = Torque (Nm)
F = Applied Force (N)
F_f = Friction Force (N)
F_n = Normal force between drum and friction pad (N)
μ = Coefficient of Friction.
b = Band width (m)
c = Distance drum pivot to centre of drum(m)
MF_f = Friction moment about shoe pivot (Nm)
MF_n = Normal Force moment about shoe pivot (Nm)
n = Rotational Speed (RPM)
p = pressure for friction surface (N/m^2)
p_{max} = Maximum pressure for friction surface(N/m^2)
θ = Brake shoe contact angle
r = Radius of brake wheel)(m)

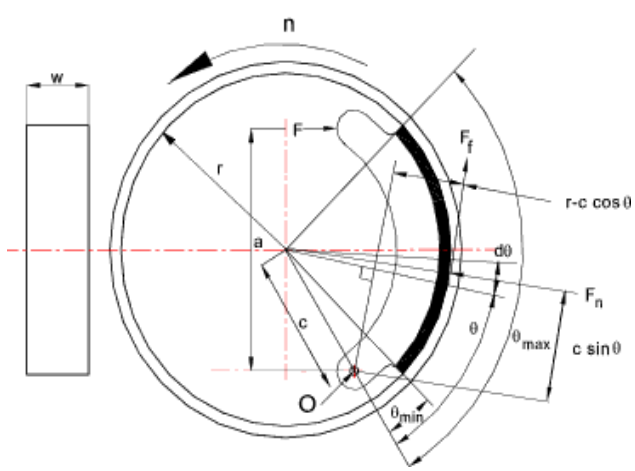

The pressure distribution evaluation for the brake shoe assumes that the shoe arm is rigid and the pressure is directly related to the distance from the pivot point. The pressure is proportional to c sin θ or p = k sin θ where, k is some constant.

For a specific brake material the maximum pressure = p_{max}. Therefore,

$$k = p_{max} / \sin\theta_{max} \text{ and}$$

$$p = \sin\theta \, (p_{max} / \sin\theta_{max})$$

The value of minimum θ is usually set to above 10^0 and the maximum pressure when the value of sin θ is 90^0. above this angle the pressure reduces. Therefore if the maximum value of θ is less than 90^0 then $\sin\theta_{max} = \sin\theta$. if the maximum angle is greater than 90^0 then $\sin\theta_{max} = \sin 90^0$

Torque Capacity for Brake Shoe

The torque capacity of a brake shoe is obtained by integrating the product of the frictional force and the drum radius

$$T = \int_{\theta_{min}}^{\theta_{max}} \mu p w r \, d\theta \, r = \mu w r^2 \int_{\theta_{min}}^{\theta_{max}} \frac{p_{max}}{\sin\theta_{max}} \sin\theta \, d\theta = \mu w r^2 \frac{p_{max}}{\sin\theta_{max}} (\cos\theta_{min} - \cos\theta_{max})$$

Actuating force required for Brake Shoe

The actuating force is calculated by taking moments about the brake shoe pivot point. MF_n is the moment due to the normal force between the shoe and the drum. MF_f is the moment due to the friction force.

To obtain the Actuating force F take moments about O

$$F = \frac{MF_n + MF_f}{a}$$

Due to normal force F_n,

$$MF_n = p \, w \, r \, d\theta \, c\sin\theta = \int_{\theta\,min}^{\theta\,max} \frac{Pmax}{\sin\theta max} w \, r \, d\theta \sin\theta \, c\sin\theta$$

$$= \frac{Pmax}{\sin\theta max} w \, r \, c \, \frac{1}{2} \left[(\theta\,max - \theta\,min) - \frac{1}{4} (\sin 2\theta\,max - \sin 2\theta\,min) \right]$$

Due to friction force F_f,

$$MF_f = \int_{\theta\,min}^{\theta\,max} \mu\, p\, w\, r\; d\theta\,(r - c\cos\theta) = \mu\, w\, r \int_{\theta\,min}^{\theta\,max} \frac{Pmax}{\sin\theta max}\; \sin\theta d\theta\,(r - c\cos\theta)$$

$$= \mu\, w\, r\; \frac{Pmax}{\sin\theta max}\left[-r\cos\theta\,max - \cos\theta\,min - \frac{c}{2}\left((\sin\,\hat{}2\,\theta\,max - \sin\,\hat{}2\,\theta\,min\right)\right]$$

Opposite handed brake shoe

The opposite handed brake shoe as shown below results in the friction moment being of opposite to the normal force moment and the brake system is to some extent self energizing with a possibility of self locking.
To obtain the maximum torque for each brake shoe [10]

To obtain the Actuating force F take moments about O

$$F = -\frac{(MF_n - MF_f)}{a}$$

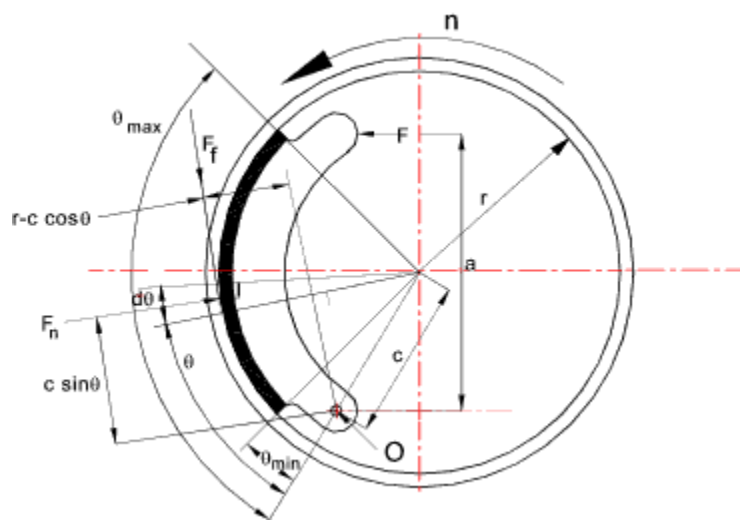

Functional Description of disc brakes:

To stop the wheel, friction material in the form of brake pads (mounted on a device called a **brake caliper**) is forced mechanically, hydraulically, pneumatically or electromagnetically against both sides of the disc. Friction causes the disc and attached wheel to slow or stop. The brake system requires hydraulic force which is many times greater than the force applied by the foot. This added hydraulic force is achieved by leverage multiplication. The multiplying force can be changed by varying the relative location of the brake master cylinder rod pivot as it relates to the lever.

In the hydraulic force multiplication method, the force which is applied at one point is transmitted by incompressible brake fluid to another point. This basic system consists of

two pistons (master cylinder and wheel caliper or cylinder), which are filled with brake fluid and are connected by a brake line of any length or shape. When the brake pedal is forced down brake fluid from the master cylinder is transferred to the brake caliper piston, pressurized fluid is transmitted through the brake caliper to the brake pads or shoes, which are mounted to the brake caliper or wheel cylinder. [8]

Nomenclature

F = Applied Force (N)
P = Brake Power kW
M = Torque (Nm)
F = Actuating Force (N)
μ = Coefficient of Friction.
θ_1, θ_2 = Brake pad angles (rad)
r = Radius of brake ring thickness dr (m)
r_i, r_o = Inner, Outer radius of brake. (m)
n = Rotational Speed (RPM)
p = Pressure for friction surface(N/m^2)
p_{max} = Maximum pressure for friction surface(N/m^2)

Theory

There are two operating conditions applicable to disk brakes.

- Uniform wear - Applicable for practical brakes after period of operation
- Uniform pressure - Applicable for new brakes.

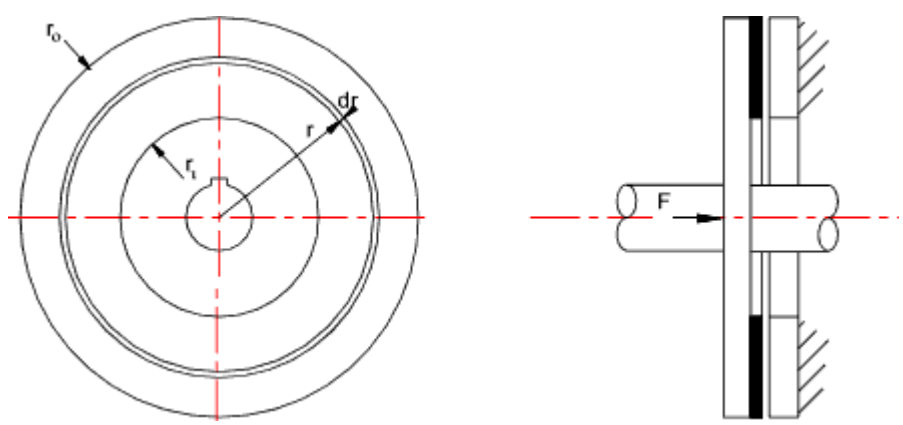

Uniform wear

The wear (W) at any location on a brake is assumed to be proportional to the pressure intensity (p) and the associated relative velocity (v)of the local ring of contact.

Wear is proportional to pv which is proportional to pr

Therefore W = kpr where k is a proportionality constant

W/k = pr = K ...K = constant because both W and k are constants

Because pr is a constant then the maximum pressure occurs at the minimum radius.

Therefore $K = pr = p_{max} r_i$ or $p = p_{max} r_i / r$

The maximum permissable pressure (p_{max}) depends on the friction material used.

The actuating force F is normal to the friction surface and equates to the integral of the pressure x area over the friction surface.

$$F = \int_{r_i}^{r_o} p.2.\pi.r.\,dr = \int_{r_o}^{r_o} p_{max}.2.r.\pi.\frac{r_i}{r}\,dr = p_{max}.2.\pi.\,r_i(r_o - r_i)$$

The torque capacity of a brake is the integral of the friction force (μ F) x Radius (r)

$$T = \int_{r_i}^{r_o} r.\mu.p\,.2.\pi.r.\,dr = \int_{r_i}^{r_o} 2.\pi.\mu.r^2.p_{max}\frac{r_i}{r}\,dr = \pi.\mu.r_i.p_{max}.(r_o^2 - r_i^2)$$

$$= \pi.\mu.r_i.p_{max}.(r_o - r_i).(r_o + r_i) = \frac{F.\mu.(r_o + r_i)}{2}$$

Uniform pressure

When considering the capacity of a disk brake subject uniform pressure, every point on the brake face is subject to the maximum design pressure for the friction material. This condition applies mainly to new brakes.

The actuating force F is normal to the friction surface and equates to the integral of the pressure x area over the friction surface.

$$F = \int_{r_i}^{r_o} p_{max}.2.\pi.r.\,dr = p_{max}.\pi.(r_o^2 - r_i^2)$$

The torque capacity of a brake is the integral of the friction force (μ F) x Radius (r) [11]

$$T = \int_{r_i}^{r_o} r.\mu.p_{max}.2.\pi.r.\,dr = \frac{2}{3}\pi.\mu.p_{max}.(r_o^3 - r_i^3) = \frac{2}{3}F.\mu\,\frac{(r_o^3 - r_i^3)}{(r_o^2 - r_i^2)}$$

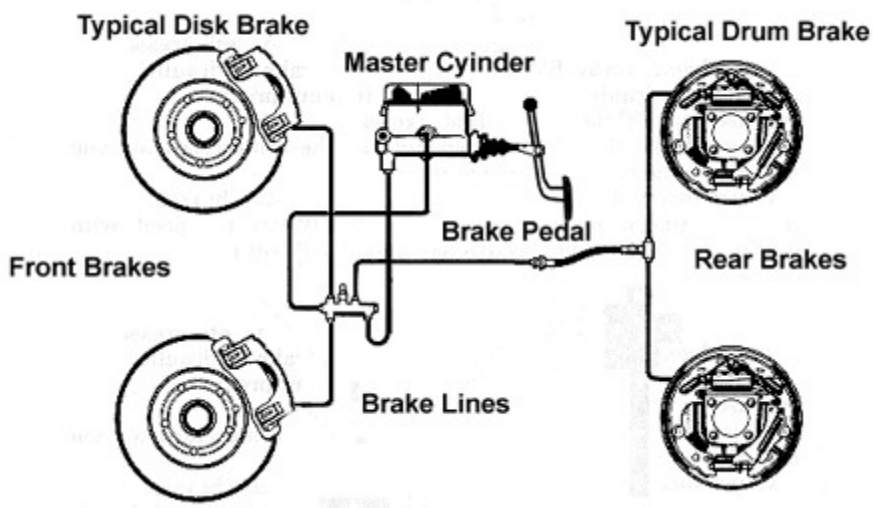

8.3 STEERING

For a perfect steering we must always have an instantaneous centre about which all the wheels must rotate. For this purpose inner wheel has to rotate less than the outer wheel to achieve this condition, Ackermann steering mechanism has been used in SPMUV.

The Ackermann steering mechanism consists of cross link connected to short axles of the two front wheels through short arms and forming bell crank levers. When the vehicle is running straight the cross link is parallel to the short arm and both make angles to the horizontal axis of the chassis.

When a vehicle is steered, it follows a path which is part of the circumference of its turning circle, which will have a centre point somewhere along a line extending from the axis of the fixed axle. The steered wheels must be angled so that they are both at 90 degrees to a line drawn from the circle centre through the centre of the wheel. Since the wheel on the outside of the turn will trace a larger circle than the wheel on the inside, the wheels need to be set at different angles.

The Ackermann steering geometry arranges this automatically by moving the steering pivot points inward so as to lie on a line drawn between the steering kingpins and the centre of the rear axle. The steering pivot points are joined by a rigid bar, the tie rod, which can also be part of the, for example, rack and pinion steering mechanism. This arrangement ensures that at any angle of steering, the centre point of all of the circles traced by all wheels will lie at a common point. [4]

For correct steering,

$$1/\tan\alpha_{out} - 1/\tan\alpha_{in} = B/L$$

Where
B= distance between convergent point and front axle
L=distance between front and rear axle
α_{out} = turn angle of the wheel on the outside of the turn
α_{in} = turn angle of the wheel inside of the turn

$$\alpha_{out} = \text{Arc tan}\left[\ 1/(B/L) + (1/\tan\alpha_{in})\ \right]$$

$$R = B/2 + L/\tan\alpha_{in}$$

The values of B/L is between 0.4 and 0.5

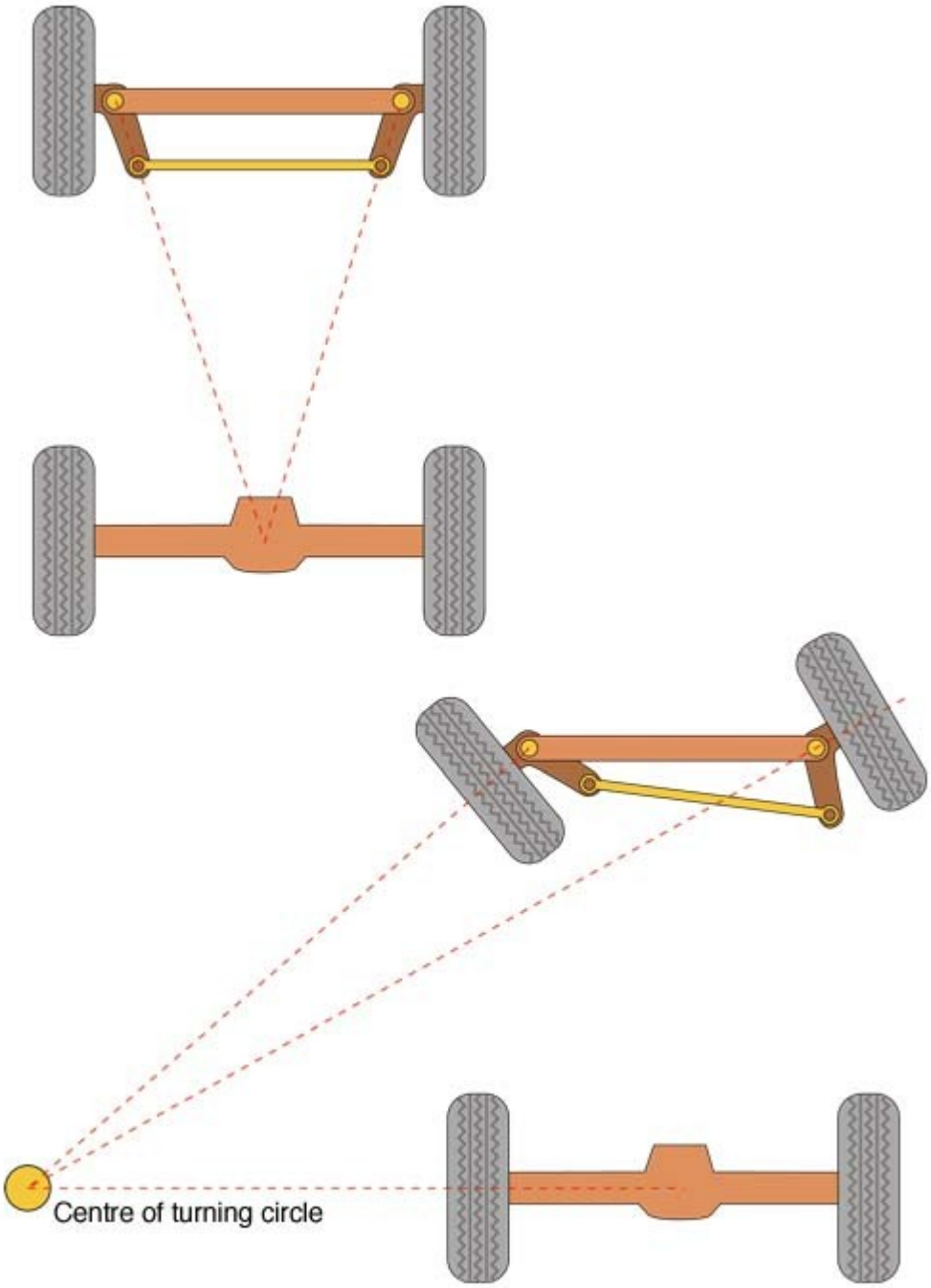
Centre of turning circle

8.4 SUSPENSION

Suspension is the term given to the system of springs, shock absorbers and linkages that connects a vehicle to its wheels. This suspension connects an automobile to its wheels. The suspension systems not only help in the proper functioning of the car's handling and braking, but also keep vehicle occupants comfortable and make the drive smooth and pleasant. It also protects the vehicle from wear and tear.

There are two types of suspension systems- dependent and independent. A dependent suspension comprises a beam that holds wheels parallel to each other and perpendicular to the axle. An independent suspension helps in the rising and falling movement of the wheels. [1]

The suspension types used for SPMUV are two different systems. At the front an independent system McPherson struts are used and at the rear a dependent system leaf springs are used.

Front suspension system

The **McPherson strut** is a type of car suspension system which uses the axis of a telescopic damper as the upper steering pivot, widely used in modern vehicles. It consists of a wishbone or a substantial compression link stabilized by a secondary link which provides a bottom mounting point for the hub or axle of the wheel. This lower arm system provides both lateral and longitudinal location of the wheel. The upper part of the hub is rigidly fixed to the inner part of the strut proper, the outer part of which extends upwards directly to a mounting in the body shell of the vehicle. The strut will carries both the coil spring on which the body is suspended and the shock absorber, which is usually in the form of a cartridge mounted within the strut. [2] [7]

Nomenclature

C = Spring Index D/d
d = wire diameter (m)
D = Spring diameter (m)
W = Axial Force (N)
G = Modulus of Rigidity (N/m^2)
n = Number of active coils

Spring Index

$$C = \frac{D}{d}$$

D= 51.7mm,d= 8mm

$$c = \frac{51.7}{8}$$

C = 6.4625

<u>Spring Rate</u>

The spring rate = Axial Force /Axial deflection

$$\delta = \frac{8\,W\,(C^3)\,n}{G\,d}\,\frac{(C^2)}{(C^2)+0.5}$$

In general,

$\frac{(C^2)}{(C^2)+0.5}$ = 1, so this value is neglected.

W = M*g = 500 * 9.81 = 4905N

But weight on each wheel = $\frac{4905}{4} = 1226.25N$

Rigidity modulus for carbon steel = 80 * 10^3 k N/mm^2

n = number of active coils = 8

$$\delta = \frac{8\,W\,(C^3)\,n}{G\,d}$$

$$\delta = \frac{8*1226.25*(6.46^3)*8}{(80*10^9)*0.008}$$

δ = 33mm

Now we know,

Stiffness rate, K = $\frac{W}{\delta}$

K = 1226.25 / 33

K = 37.159N/mm

Rear suspension system

A **leaf spring** is a simple form of spring, commonly used for the suspension in wheeled vehicles. It is also one of the oldest forms of springing. For very heavy vehicles, a leaf spring can be made from several leaves stacked on top of each other in several layers, often with progressively shorter leaves. Leaf springs serve locating and to some extent damping as well as springing functions.

Leaf springs consisting of 11 leaves made of steel plates, of increasing lengths from the centre, and side clamps at the sides are used so that the leaves be in position. Main leaf is the longest one having bent ends, called spring eyes. The spring eye is connected to the shackle. The leaf springs used are semi elliptical shape.

The spring is supported on the rear axle using U- bolts. On one end the spring is supported using simple pin while on the other end, it is connected with a shackle. When the vehicle comes across a projection on the road surface, the wheels move up, deflecting the spring. This changes the length between the spring eyes. The shackle at one end gives a flexible connection. [5] [2]

Nomenclature

E= Young's Modulus (N/m^2)
W = applied Force (N)
t = thickness of leaf (m)
b = width (m)
L= length between the supports =1m
l = length of the plate or distance of load from cantilever end (m) = L/2
t = thickness of leaf (m)
δ = deflection (m)
k = spring rate (stiffness) W/δ (N/m)

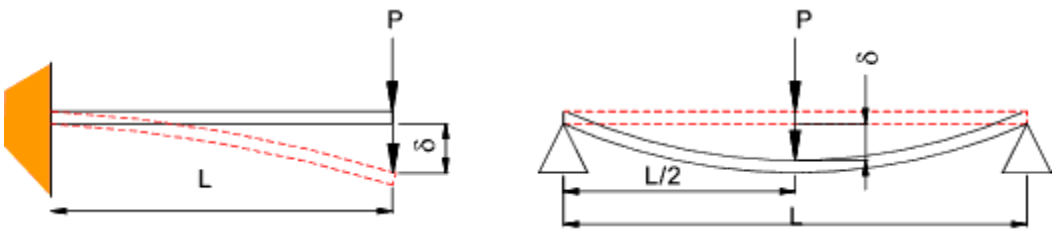

The relevant equations for the semi-elliptic spring as shown below are

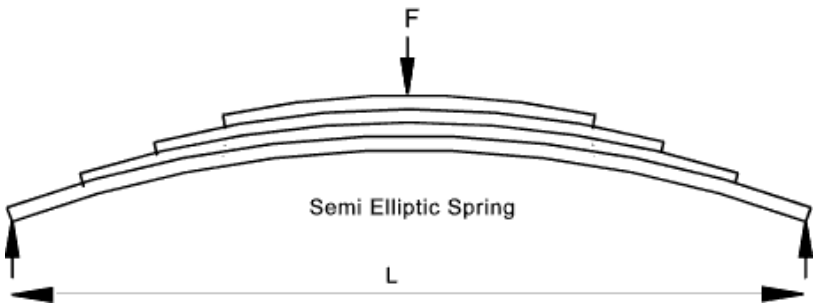

The deflection of the leaf springs,

$$\delta = \frac{6\ w\ l^3}{n\ E\ b\ t^3}$$

W = M*g = 500 * 9.81 = 4905N

But weight on each wheel = $\frac{4905}{4} = 1226.25N$

l = L/2 =1/2 = 0.5m

$$\delta = \frac{6*1226.25*(0.5^3)}{11*(210*10^9)*0.045*(0.006^3)} = 0.04096\text{m}$$

$$\delta = 40.96\text{mm}$$

Now we know,

Stiffness rate, K = $\frac{W}{\delta}$

K = 1226.25 / 40.96

K = 29.93 N/mm

CHAPTER – 9

CORE PARTS

9.1 MOTOR

An **electric motor** uses electrical energy to produce mechanical energy, nearly always by the interaction of magnetic fields and current-carrying conductors.

The classic division of electric motors has been that of Alternating Current (AC) types versus Direct Current (DC) types. A DC motor is designed to run on DC electric power. By far the most common DC motor types are the brushed and brushless types, which use internal and external commutation respectively to create an oscillating AC current from the DC source -- so they are not purely DC machines in a strict sense.

Principle of operation:

In any electric motor, operation is based on simple electromagnetism. A current-carrying conductor generates a magnetic field; when this is then placed in an external magnetic field, it will experience a force proportional to the current in the conductor, and to the strength of the external magnetic field. This can be given by the equation

Force, $\mathbf{F = B\,I\,l}$ N

Where B is the magnetic field in Weber/m^2.

I is the current in amperes and

l is the length of the coil in meter.

As we all are well aware that opposite (North and South) polarities attract, while like polarities (North and North, South and South) repel. The internal configuration of a DC motor is designed to harness the magnetic interaction between a current-carrying conductor and an external magnetic field to generate rotational motion. [6]

An highly efficient motor called the lynch motor is used for the SPMUV.

The specifications of the motor are:

Torque: 24 N-m

Power: 6500 W

Speed: 2600 rpm

Voltage: 48 V

Current: 150 Amps

The speed of the motor changes directly with the current supplied to the motor.

The power and torque of the motor change directly with the voltage supplied to the motor.

The shaft of the motor is connected to the differential shaft of the SPMUV using a chain drive. A sprocket is fixed on the motor shaft and another sprocket is fixed on the differential shaft. The power is transmitted from the motor using a chain which is placed linking both the sprockets.

The below shown graph is a representation of the curves that would obtain for a DC Motor.

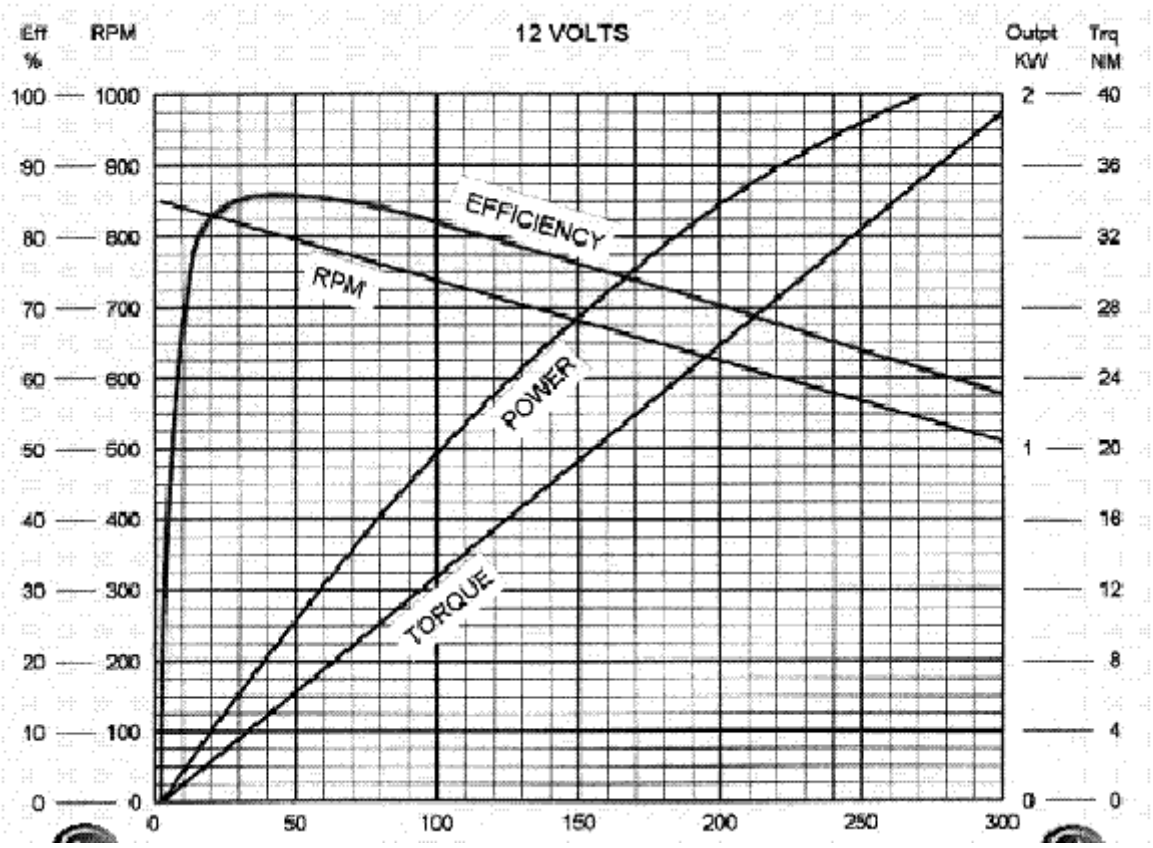

9.2 BATTERIES

A **battery** or **voltaic cell** is a combination of one or more electrochemical Galvanic cells which store chemical energy that can be converted into electric potential energy, creating electricity.

Batteries can be broadly classified into two categories,

- ***Primary*** batteries irreversibly (within limits of practicality) transform chemical energy to electrical energy. When the initial supply of reactants is exhausted, energy cannot be readily restored to the battery by electrical means.
- ***Secondary*** batteries can be recharged; that is, they can have their chemical reactions reversed by supplying electrical energy to the cell, restoring their original composition.

The secondary batteries used for the SPMUV are four 12V, 150A lead -acid batteries. All the four batteries are connected in series, the current remains constant and the voltage can be varied. This helps in running the motor at various speeds.

Lead- acid batteries are the oldest type of rechargeable battery. This battery is notable in that it contains a liquid in an unsealed container, requiring that the battery be kept upright and the area be well ventilated to ensure safe dispersal of the hydrogen gas produced by these batteries during overcharging. Despite having the second lowest energy-to-weight ratio and a correspondingly low energy-to-volume ratio, the lead-acid battery is also very heavy for the amount of electrical energy it can supply. Despite this, its low manufacturing cost and its high surge current levels make its use common where a large capacity is required, their ability to supply high surge currents means that the cells maintain a relatively large power-to-weight ratio. These features, along with their low cost, make them attractive for use in cars.

Operation of Lead Acid Batteries

A lead acid battery consists of a negative electrode made of spongy or porous lead. The lead is porous to facilitate the formation and dissolution of lead. The positive electrode consists of lead oxide. Both electrodes are immersed in an electrolytic solution of sulfuric acid and water. In case the electrodes come into contact with each other through physical movement of the battery or through changes in thickness of the electrodes, an electrically insulating, but chemically permeable membrane separates the two electrodes. This membrane also prevents electrical shorting through the electrolyte. Lead acid batteries store energy by the reversible chemical reaction shown below.

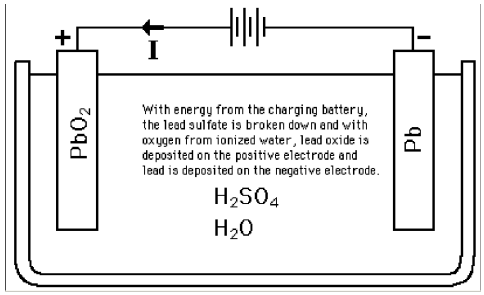

The overall chemical reaction is:

$$PbO_2 + Pb + 2H_2SO_4 \underset{charge}{\overset{discharge}{\rightleftharpoons}} 2PbSO_4 + 2H_2O$$

At the negative terminal the charge and discharge reactions are:

$$Pb + SO_4^{2-} \underset{charge}{\overset{discharge}{\rightleftharpoons}} PbSO_4 + 2e^-$$

At the positive terminal the charge and discharge reactions are:

$$PbO_2 + SO_4^{2-} + 4H^+ + 2e^- \underset{charge}{\overset{discharge}{\rightleftharpoons}} PbSO_4 + 2H_2O$$

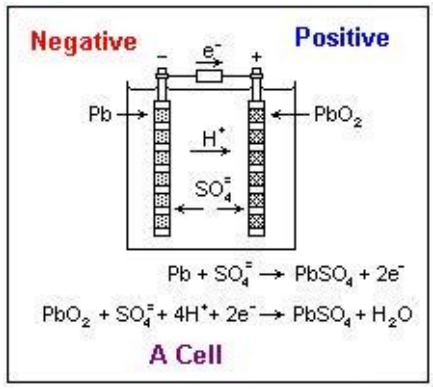

Because of the open cells with liquid electrolyte in most lead-acid batteries, overcharging with excessive charging voltages will generate oxygen and hydrogen gas by electrolysis of water, forming an explosive mix. This should be avoided by opening the caps of the batteries while charging. Caution must also be observed as sulfuric acid is extremely corrosive in nature.

Capacity of the battery

Because of the chemical reactions within the cells, the capacity of a battery depends on the discharge conditions such as the magnitude of the current, the duration of the current, the allowable terminal voltage of the battery, temperature and other factors. The available capacity of a battery depends upon the rate at which it is discharged. If a battery is discharged at a relatively high rate, the available capacity will be lower than expected.

A battery capacity rating is always related to expected discharge duration.

$$t = \frac{Q}{I}$$

Where,

Q is the battery capacity (typically given in mA·h or A·h).

I is the current drawn from battery (mA or A).

t is the amount of time (in hours) that a battery can sustain.

The relationship between current, discharge time and capacity for a lead acid battery is expressed by Peukert's law. Theoretically, a battery should provide the same amount of energy regardless of the discharge rate, but in real batteries, internal energy losses cause the efficiency of a battery to vary at different discharge rates. When discharging at low rate, the battery's energy is delivered more efficiently than at higher discharge rates.

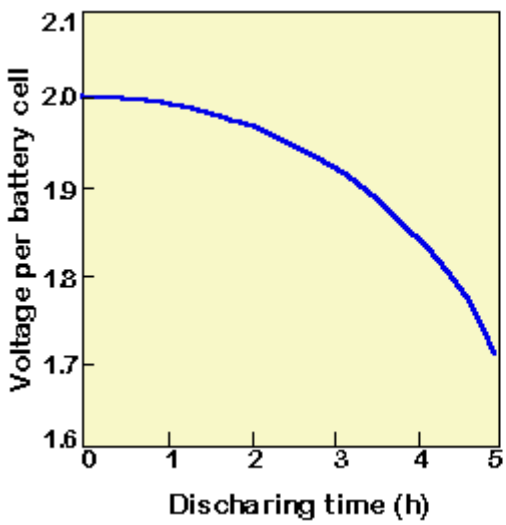

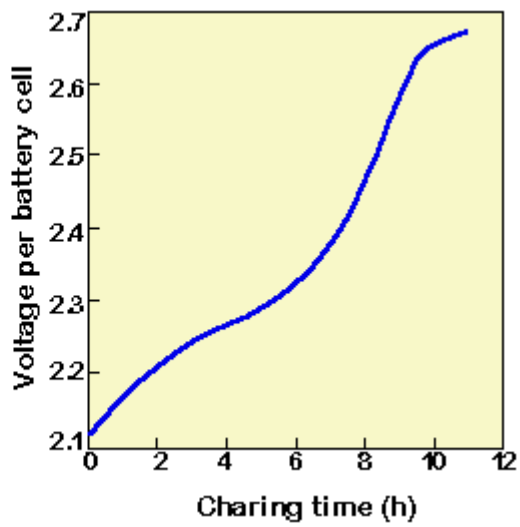

9.3 SOLAR PANELS

Solar panels are the solar photovoltaic modules use solar cells to convert light from the sun into electricity. A photovoltaic module or photovoltaic panel is a packaged interconnected assembly of photovoltaic cells, also known as solar cells. An installation of photovoltaic modules or panels is known as a photovoltaic array. Photovoltaic cells typically require protection from the environment. For cost and practicality reasons a number of cells are connected electrically and packaged in a photovoltaic module, while a collection of these modules that are mechanically fastened together, wired, and designed to be a field-installable unit, sometimes with a glass covering and a frame and backing made of metal, plastic or fiberglass, are known as a **photovoltaic panel** or

simply **solar panel**. A photovoltaic installation typically includes an array of photovoltaic modules or panels, an inverter, batteries and interconnection wiring.

Photovoltaic (PV) cells are made of special materials called semiconductors such as silicon, which is currently the most commonly used. Basically, when light strikes the cell, a certain portion of it is absorbed within the semiconductor material. This means that the energy of the absorbed light is transferred to the semiconductor. The energy knocks electrons loose, allowing them to flow freely. PV cells also all have one or more electric fields that act to force electrons freed by light absorption to flow in a certain direction. This flow of electrons is a current, and by placing metal contacts on the top and bottom of the PV cell, we can draw that current off to use externally. For example, the current can power a calculator. This current, together with the cell's voltage defines the power (or wattage) that the solar cell can produce.

Photovoltaic panels, the most common form of solar panels in the professional electrical generation industry, are able to absorb energy from the sun through a variety of smaller solar cells on their surface. Much like how a plant is able to absorb energy from the sun for photosynthetic purposes, solar cells behave in a similar fashion. Solar panels are comprised of several individual solar cells. These solar cells function similarly to large semiconductors and utilize a large-area p-n junction diode. When the solar cells are exposed to sunlight, the p-n junction diodes convert the energy from sunlight into usable electrical energy. As the photons from the sun's rays hit the solar cells on a photovoltaic panel, the energy is transferred to a silicon semiconductor. The energy generated from photons striking the surface of the solar panel allows electrons to be knocked out of their orbits and released, and electric fields in the solar cells pull these free electrons in a directional current, from which metal contacts in the solar cell can generate electricity. The photon is then transformed into electricity and then passed through connecting wires to finally enter a power generation facility. At this point we have generated electricity, but the process is not complete yet. One should make sure they store this energy for times when either there is little or no sunlight, such as at night. This can be done by storing this energy in batteries. Here in SPMUV, Lead Acid batteries are used for this purpose.

Pure silicon is a poor conductor of electricity because none of its electrons are free to move about. Instead, the electrons are all locked in the crystalline structure. The silicon in a solar cell is modified slightly so that it will work as a solar cell. A solar cell has silicon with impurities i.e. other atoms mixed in with the silicon atoms, changing the way things work a bit. We usually think of impurities as something undesirable, but in our case, our cell wouldn't work without them. When silicon combines with an element that has five electrons to share, such as phosphorus, a negative charge is created. Silicon can only take four of the five electrons. This leaves one free electron looking for a spot. These additional electrons are known as free carriers; they carry an electrical current.

On the other hand, when silicon is combined with an element that has three electrons a positive charge is created. Boron is a material which suits this purpose. When silicon and boron are combined, holes are created. These silicon combinations and their differing charges are used to make solar panels.

EXPLANATION

The process of adding impurities on purpose is called **doping**, and when doped with phosphorous, the resulting silicon is called **N-type** ("n" for negative) because of the prevalence of free electrons. N-type doped silicon is a much better conductor than pure silicon is.

The other part is doped with boron, which has only three electrons in its outer shell instead of four, to become **P-type** silicon. Instead of having free electrons, P-type silicon ("p" for positive) has free holes. Holes really are just the absence of electrons, so they carry the opposite (positive) charge. They move around just like electrons do.

The interesting part starts when you put N-type silicon together with P-type silicon. Every PV cell has at least one electric field. Without an electric field, the cell wouldn't work, and this field forms when the N-type and P-type silicon are in contact. Suddenly, the free electrons in the N side, which have been looking all over for holes to fall into, see all the free holes on the P side, and there's a mad rush to fill them in.

Anatomy of a Solar Cell

Before now, our silicon was all electrically neutral. Our extra electrons were balanced out by the extra protons in the phosphorous. Our missing electrons (holes) were balanced out by the missing protons in the boron. When the holes and electrons mix at the junction between N-type and P-type silicon, however, that neutrality is disrupted. Right at the junction, they do mix and form a barrier, making it harder and harder for electrons on the N side to cross to the P side. Eventually, equilibrium is reached, and we have an electric field separating the two sides.

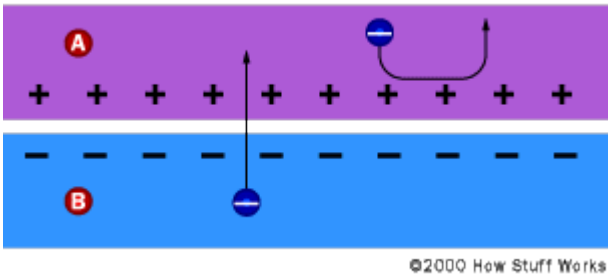

A n-type Silicon
B p-type Silicon

The effect of the electric field in a PV cell

This electric field acts as a diode, allowing (and even pushing) electrons to flow from the P side to the N side, but not the other way around. It's like a hill -- electrons can easily go down the hill (to the N side), but can't climb it (to the P side).

So an electric field acting as a diode in which electrons can only move in one direction is attained.

When light, in the form of photons, hits the solar cell, its energy frees electron-hole pairs.

Each photon with enough energy will normally free exactly one electron, and result in a free hole as well. If this happens close enough to the electric field, or if free electron and free hole happen to wander into its range of influence, the field will send the electron to the N side and the hole to the P side. This causes further disruption of electrical neutrality, and if an external current path is provided, electrons will flow through the path to their original side (the P side) to unite with holes that the electric field sent there, doing work along the way. The electron flow provides the **current**, and the cell's electric field causes a **voltage**. With both current and voltage, we have **power**, which is the product of the two.

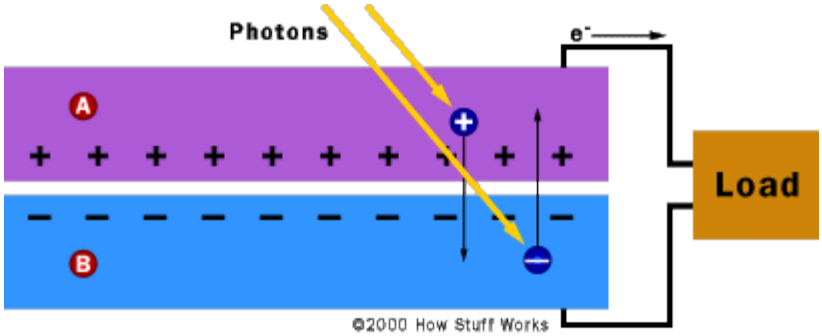

A n-type Silicon
B p-type Silicon

Operation of a PV cell

There are a few more steps left before we can really use our cell. Silicon happens to be a very shiny material, which means that it is very reflective. Photons that are reflected can't be used by the cell. For that reason, an antireflective coating is applied to the top of the cell to reduce reflection losses to less than 5 percent.

The final step is the glass cover plate that protects the cell from the elements. PV modules are made by connecting several cells (usually 36) in series and parallel to achieve useful levels of voltage and current, and putting them in a sturdy frame complete with a glass cover and positive and negative terminals on the back. [12]

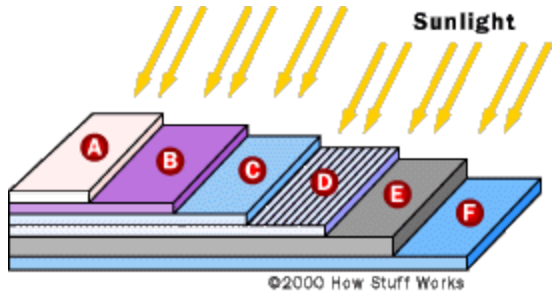

A Cover glass
B Antireflective coating
C Contact grid
D N-type Si
E P-type Si
F Back contact

Basic structure of a generic silicon PV cell

The solar panels used for SPMUV are four of 170W, 24V panels of area 1618*808 mm^2. This can generate a power of 680W which is sufficient for the SPMUV to run.

CHAPTER – 10

ELECTRICAL COMPONENTS

10.1 ELECTRICAL CONNECTIONS

There are four batteries of 12V each for SPMUV. The voltage of the motor is 48V. Three switches have been used for the vehicle to run in four different speeds. Each switch has two contacts. The first switch has the two contacts as forward and reverses represented as F & R on the switch. The second and third switches have their two contacts as two different speeds, in total four speeds. These four speeds are attained by supplying different voltages [represented as12V, 24V, 36V, 48V] to the corresponding switch. The

12V and 24V wires are connected to switch number 1. The 36V, 48V wires are connected to switch number 2.

Deciding the drive to be forward / reverse the switch M should be operated accordingly. Caution should be taken while operating the switches 1 and 2. As the total voltage should not exceed 48V, one of the switches i.e. either 1 or 2 should always be kept in OFF position at any time of the driving. That is if switch 1 is in ON position, switch 2 should be kept in OFF position and vice versa.

The green wire indicates as 12V. Blue wire indicates as 24V. As 36V and 48V are the top most speeds these are indicated by using red color wire.

The panels are of 24V each. To obtain 48V panel A and panel B are connected in series, likewise panel C and panel D are connected in series. These both are in turn connected in parallel to have a total voltage of 48V.

CONNECTIONS TO SWITCHES AND PANELS

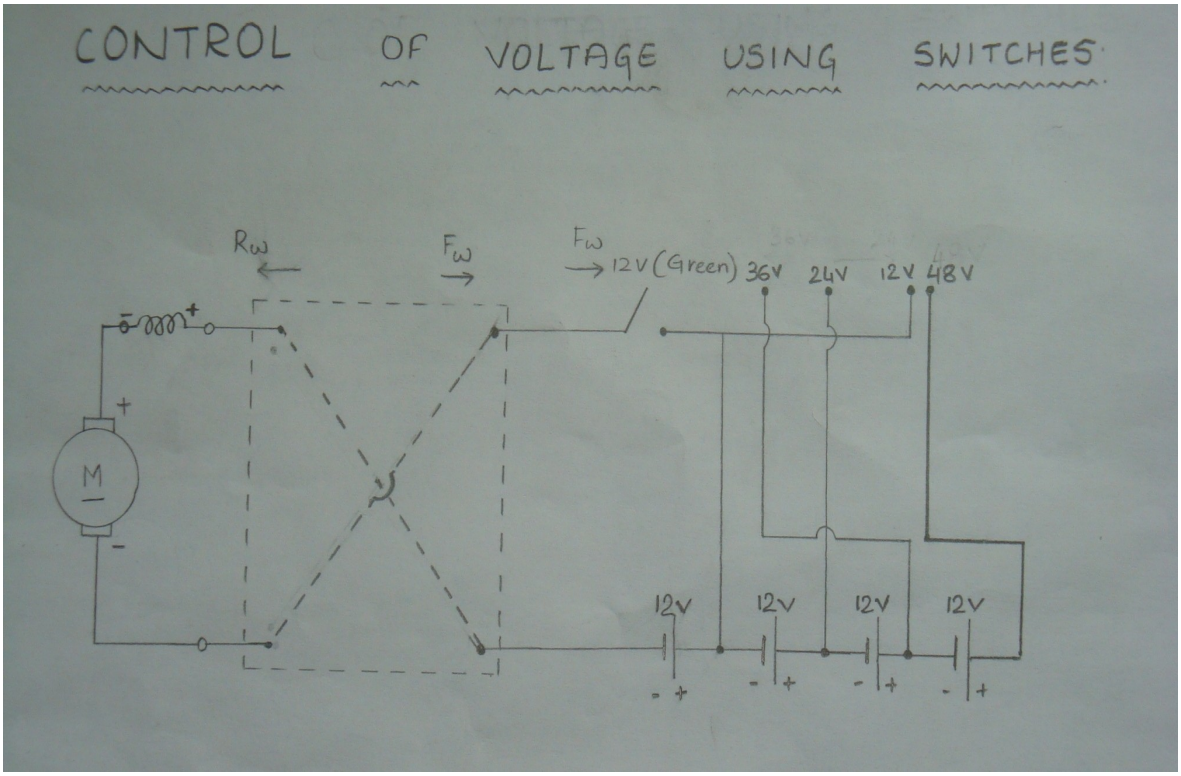

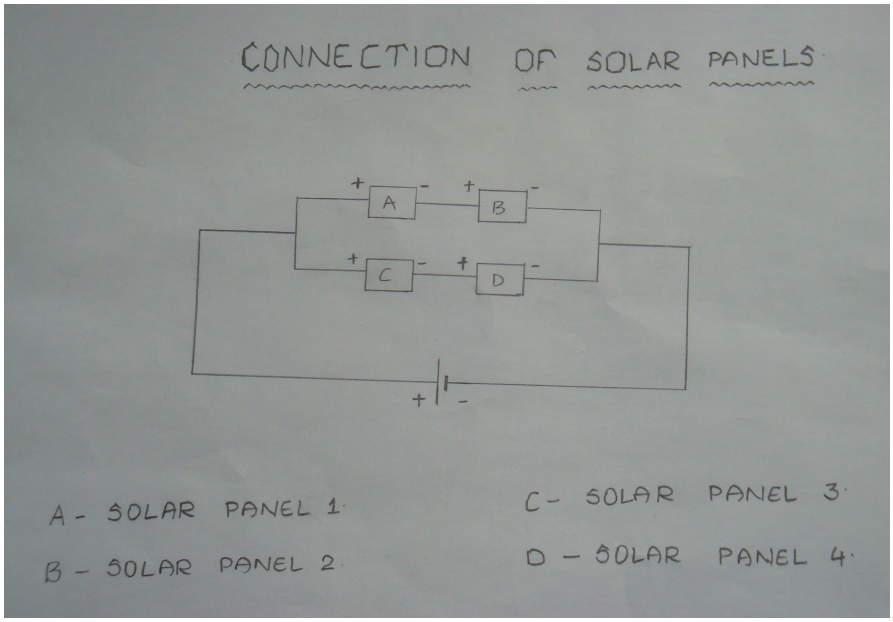

10.2 AC CHARGER

The ac charger is used to charge the batteries of the SPMUV in the absence of sunlight, using the regular AC supply.

An 8amp AC charger is used for this purpose. It takes 12 hrs to charge the 4 batteries completely, as the batteries never get completely discharged.

The current and the voltage output from the AC charger can be varied according to the requirement.

At times, like on a cloudy day, when solar power is not available, the batteries can be comfortably charged through this way. This helps in restoring the energy in the batteries and uses it when necessary.

CHAPTER – 11

VIBRATION ANALYSIS IN ANSYS

11. VIBRATION ANALYSIS IN ANSYS

Modal analysis (MA)

Modal analysis is used to determine the vibration characteristics (natural frequencies and mode shapes) of a structure or a machine component while it is being designed. It also can be a starting point for another, more detailed, dynamic analysis, such as a transient dynamic analysis, a harmonic response analysis, or a spectrum analysis.

Modal analysis is used to determine the natural frequencies and mode shapes of a structure. Modal analysis, while being one of the most basic dynamic analysis types available in ANSYS, can also be more computationally time consuming than a typical static analysis. The natural frequencies and mode shapes are important parameters in the design of a structure for dynamic loading conditions. They are also required to do spectrum analysis or a mode superposition harmonic or transient analysis. Multiple time saving modal solution methods are available in ANSYS for mode extraction from the reduced solution, such as,

- Block Lanczos method
- PCG Lanczos method
- Reduced (Householder) method
- Unsymmetric method
- Damped method
- QR damped method

By doing a modal analysis, which calculates the natural frequencies and mode shapes, you can learn how the structure responds when those modes are excited. The natural frequencies are also useful for calculating the correct integration time step.

To validate the results of the modal analysis, the natural frequencies, amplitude ratios and the particular solution are also computed analytically. Furthermore, ANSYS is used to determine the system response resulting from a harmonic excitation.

$$\mathbf{M\,\ddot{x} + K\,x = 0}$$

It is customary to perform modal analysis on mechanical systems without due regards to their stress state. It is believed that the stress stiffening can change the response frequencies of a system which impacts both modal and transient dynamic responses of the system. This is explained by the fact that the stress state would influence the values of the stiffness matrix. [13]

It is important to investigate the effect of pre-stress on the vibration behavior of simple structures using finite element package ANSYS. This is achieved by first performing a structural analysis on a loaded structure then makes us of the resulting stress field to proceed on a modal analysis.

The main steps involved in analyzing the structure for vibrations contain the following,

1. Starting ANSYS

2. DEFINING THE MATERIAL PROPERTIES

- Defining element types

  The following elements are used in the analysis.

  1. Beam elements : representing the 'C' channel sections of the structure
  2. Flat shell elements : representing the plates of the structure.
  3. Spring elements : with relevant stiffness representing suspension system and tyres.
  4. Mass elements : to indicate position of loading

- Defining real constants

  The real constants for various elements are as follows,

  1. Beam element: area, Iyy, Izz for the corresponding 'C' channel sections (attached in annexure).
  2. Flat shell element: taking thickness as uniform.
  3. Spring element: taking leaf spring and tyre as in series, stiffness is taken as real constant.
  4. Mass element: mass corresponding to loading capacity is distributed uniformly in the loading area at relevant nodes.

- Material properties

3. CREATE GEOMETRY

- Key points
- Lines
- Defining attributes of the lines
- Creating Mass elements

However in the present case nodes & elements are directly defined. The FE model has 41 nodes, 29 elements.

4. SOLUTION

- Defining the analysis type
- Defining the constraints
- Performing the analysis

5. REVIEWING THE RESULTS

- Tabular
- Graphical
- Animation

6. CHANGING THE CONSTRAINTS FOR MODIFIED ANALYSIS

7. REVIEWING THE RESULTS

During the operation of the motor running at 2600rpm indicated no vibrations of the chassis structure as shown in the modal analysis there is no frequency near the operating frequency of the motor and hence resonance has not occurred which otherwise leads to high vibrations.

The results are as follows,

***** INDEX OF DATA SETS ON RESULTS FILE *****

SET	TIME/FREQ	LOAD STEP	SUBSTEP	CUMULATIVE
1	9.5455	1	1	1
2	18.243	1	2	2
3	20.193	1	3	3
4	28.451	1	4	4
5	30.858	1	5	5
6	33.634	1	6	6
7	40.714	1	7	7
8	47.937	1	8	8
9	51.300	1	9	9
10	56.481	1	10	10
11	58.445	1	11	11
12	60.677	1	12	12
13	66.527	1	13	13
14	71.548	1	14	14
15	73.709	1	15	15
16	76.382	1	16	16
17	78.786	1	17	17

18	83.044	1	18	18
19	83.574	1	19	19
20	93.964	1	20	20
21	95.788	1	21	21
22	98.803	1	22	22
23	100.95	1	23	23
24	103.39	1	24	24
25	107.66	1	25	25
26	109.42	1	26	26
27	109.73	1	27	27
28	114.03	1	28	28
29	118.96	1	29	29
30	121.50	1	30	30
31	122.58	1	31	31
32	129.90	1	32	32
33	134.75	1	33	33
34	135.76	1	34	34
35	135.83	1	35	35
36	141.21	1	36	36
37	143.00	1	37	37
38	151.95	1	38	38
39	156.63	1	39	39
40	160.44	1	40	40
41	167.47	1	41	41
42	172.61	1	42	42

43	180.04	1	43	43
44	181.16	1	44	44
45	184.89	1	45	45

CHAPTER – 12

CALCULATIONS

12. CALCULATIONS

The motor has been connected to the differential using a set of chain drives to reduce the speed to a certain extent. This has been done to reduce the load on the motor, since at high speeds the motor cannot pull the heavy vehicle. The following calculations have been done to know this reduced speed.

We know,

$D_M/D_D = N_D/N_M$

Where,

D_M = Pitch diameter of the sprocket attached to the motor shaft = 19cm

D_D = Pitch diameter of the sprocket attached to the differential = 7.5cm

N_m = Speed of the motor shaft = 2600rpm

ND = speed of the differential shaft.

$D_M/D_D = N_D/ N_M$

$19/7.5 = 2600/N_D$

$2.5= 2600/N_D$

$N_D = 2600/2.5$

$N_D = 1040$ rpm

In the transmission process we used two stages of gear reduction hence the speed is divided by 2.5. Hence the final speed at the differential shaft is given by,

$N_D=1040/2.5$ rpm

$N_D = 416$ rpm

For every one revolution of the wheel the differential gear revolves by two times hence,

$N_W = N_D/2$

$N_W = 416/2$

$N_W = 208$ rpm

Hence the speed of the wheel is 208rpm.

CHAPTER – 13

COMPRESSION & HARDNESS TESTS

13. COMPRESSION TESTS AND HARDNESS TESTS AND RESULTS

The material that has to be used for the construction must undergo an accurate testing as it plays the vital role in building the vehicle. Any damage to the material at any part of the vehicle may lead to malfunctioning. Therefore, tests are carried out to the specimen's failure, in order to understand a specimen's structural performance or material behavior under different loads.

Stress testing has been performed here for the material. It is a form of testing that is used to determine the stability of a given entity. It involves testing beyond normal operational capacity, often to a breaking point, in order to observe the results.

The material therefore has been tested for compression and hardness under relevant machines. Considerably satisfactory results have been obtained.

COMPRESSION TEST

For the compression test the material was tested under HYDRAULIC COMPRESSION TESTING MACHINE. The material being placed in the required slot, hydraulically load (in terms of kgf) being applied, the maximum load that the material can withstand without cracking has been noted.

The same test was performed on the different beams of varying thickness that are used for the construction of the vehicle.

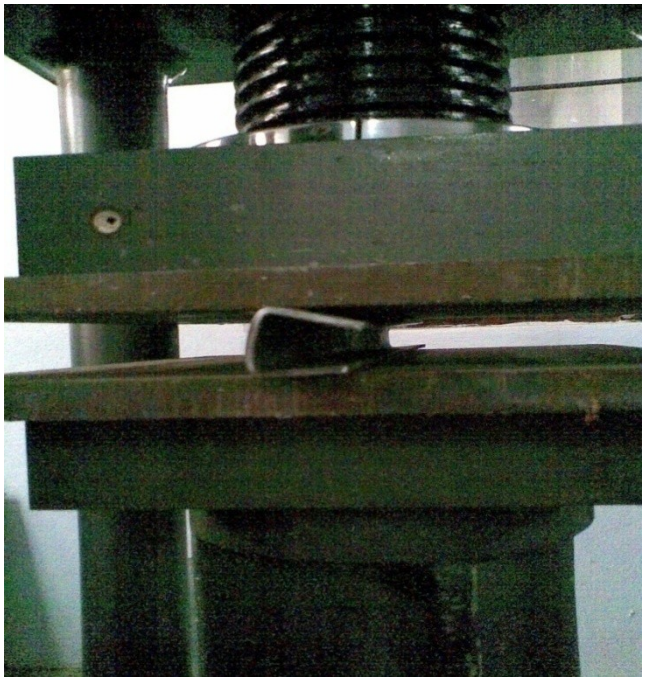

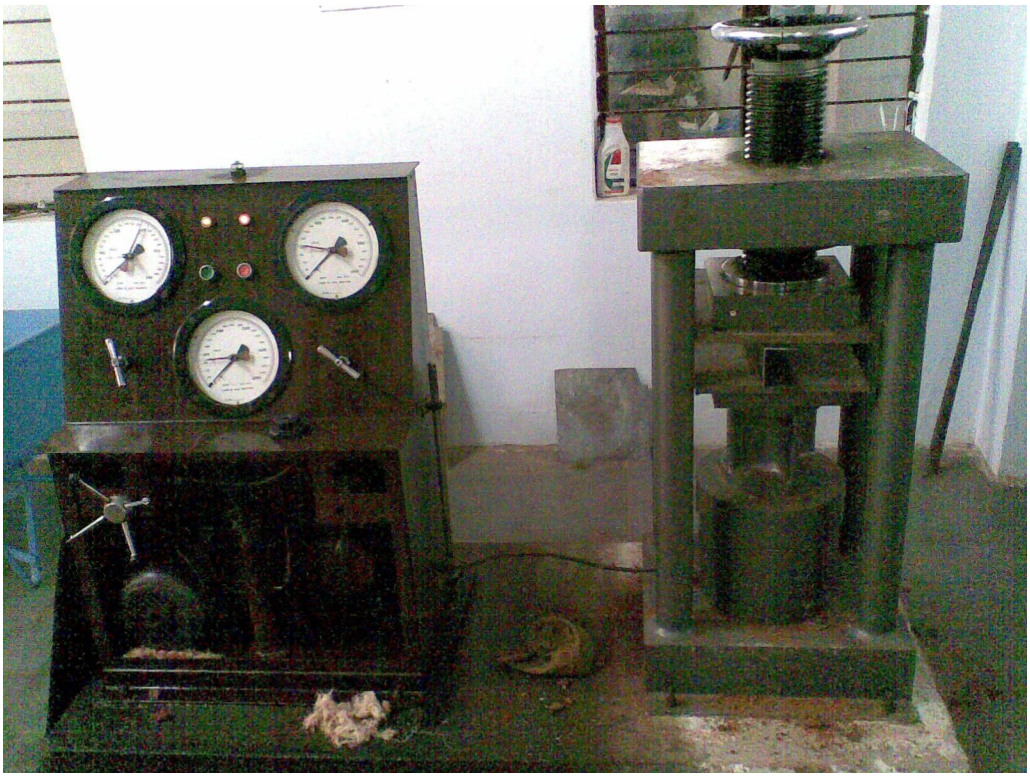

DIMENSIONS	COMPRESSION TEST RESULT	STRESS IT CAN BEAR
40*75*40 'C' Section of 4.5mm thickness	85KN	202.38 N/ mm^2
30*30*30 'C' Section of 3mm thickness	20KN	74.07 N/ mm^2

HARDNESS TEST

For the hardness test, the material was tested under ROCKWELL HARDNESS TESTING MACHINE. The test is conducted in a specially designed machine that applies the load through a system of lever gives the Hardness Number directly. The indenter used here is the diamond cone. The hardness value as read from a specially graduated dial indicator is an arbitrary number that is related to the depth of indentation. The material being placed on the even level, the pressure (in terms of kg) was applied over a particular contact area between the indenter and the material being tested. & the instance at which indentation begins to occur the corresponding Rockwell number has been noted.

The test results are as under follow,

DIMENSIONS	ROCKWELL HARDNESS VALUE
40*75*40 ‘C’ Section of 4.5mm thickness	70HRC
30*30*30 ‘C’ Section of 3mm thickness	59HRC

CHAPTER – 14

COMPARISON

14. COMPARISON

After making the mentioned modifications to the SPMUV, let's observe the comparison.

PREVIOUS CHASSIS	PRESENT CHASSIS
Track width > Wheel Base (1.2)	Modified to optimum ratio (0.7)
Carrier area is less,	Relatively large Carrier area.
Beam thickness 5mm.	Beam thickness 2mm,3mm.
Sheet thickness 2mm.	Sheet thickness 1 mm.
Batteries Weight acting at front.	Batteries weight distributed.
Heavy suspension used at front and rear.	Modified suspension system.
Less area provided for solar panels.	Increased area for solar panels.
Overall weight 650kgs.	Overall weight 397kgs
Voltage regulator used for starting and running	Switch mechanism being used for starting and running.

As mentioned before, the changes required for the previous vehicle have been envisaged and have been implemented. The outcome of remodeling the vehicle according to the planned changes has been achieved with noticeable comparisons as shown above.

CHAPTER – 15

CONCLUSION

15. CONCLUSION

Hence we would like to conclude that the main aims of the project have been achieved by remodeling the vehicle by altering certain parts.

At present situation, as we all are aware fossil fuel production rate far less than consumption rate.

At this point of time we are forced to change to renewable sources of energy.

In other words consumption is growing at a higher rate. So, we are forced to move to renewable sources of energy. Since solar energy comes handy, we preferred taking up this challenging project.

As the vehicle is designed for carrying loads, it can certainly be used in and around the campus by charging it through either of the ways i.e. solar energy & AC charging.

The load can now be easily transferred from one place to another using SPMUV.

We have been successful in reaching the targets that were planned at the initial stage.

The scope for further improvement of SPMUV,

1. Height of the base can be decreased i.e. giving less ground clearance.

2. Using efficient gear transmission system the speed of the vehicle can be increased.

3. The weight of the vehicle can be further decreased by replacing the lead acid batteries with lithium ion batteries.

4. The vehicle can be designed to be operated using remote control.

5. Dynamos can be used for charging the batteries under motion.

CHAPTER – 16

PHOTO GALLERY

16. PHOTO GALLERY

Chassis of previous SPMUV. Outer parts removed to analyze the structure

Batteries weight acting only at front for the previous SPMUV.

Batteries weight distributed in present SPMUV.

Front axle of previous SPMUV using leaf springs as suspension system.

Front axle of present SPMUV using struts as suspension system.

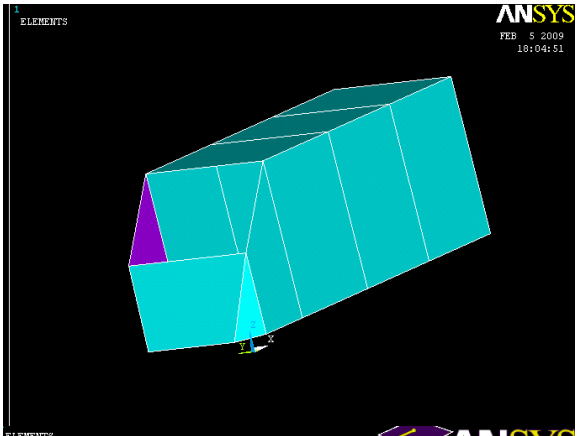

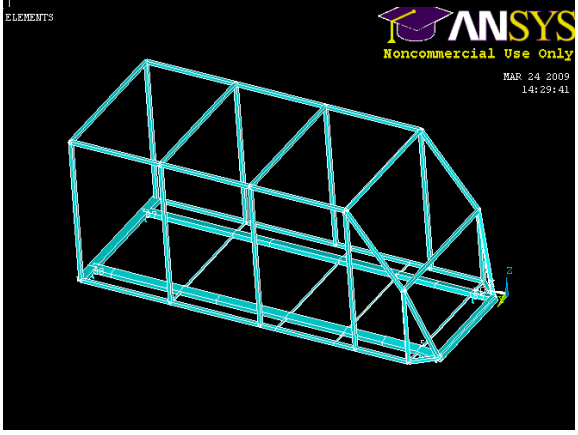

Shell elements generated

Beam elements generated.

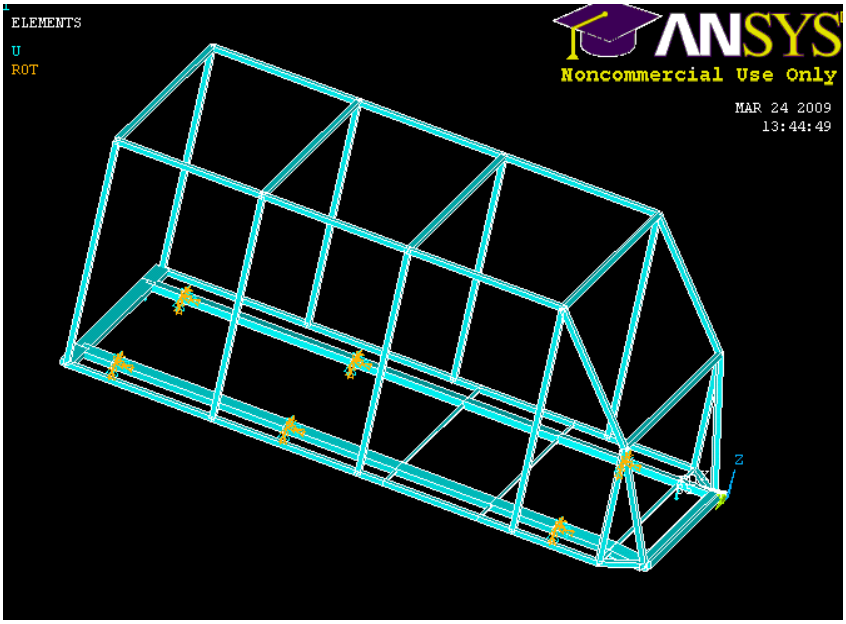

Generated springs in place of suspension system (leaf springs and struts) and tyres.

Fabricated chassis.

Fabricated chassis with rear axle assembled.

Rear suspension system (leaf springs) of SPMUV.

Front suspension system. Left and Right struts.

Body of the SPMUV after assembling of front & rear axle, batteries.

Vast space provided for the carrying of load.

Fixing plywood sheets for the base of chassis.

Observing values in ROCKWELL HARDNESS machine.

Front braking system (Disc brakes).

Rear axle with motor and leaf springs. Speed reduced by 2.5 times with the help of these gears.

SPMUV WITH SOLAR PANELS

BIBLIOGRAPHY

1. Kirpal Singh, 2007, Automobile Engineering volume 1 & 2, standard publishers, Delhi.

2. R.S. Khurmi & J.K.Gupta, 2008, Machine Design, Eurasia publishers, Delhi.

3. http://en.wikipedia.org/wiki/Differential_(mechanical_device)

4. http://en.wikipedia.org/wiki/Ackermann_steering_geometry

5. http://en.wikipedia.org/wiki/Leaf_spring

6. http://www.ncert.nic.in/html/learning_basket/electricity/electricity/machine/motor.htm

7. http://en.wikipedia.org/wiki/MacPherson_strut

8. http://auto.howstuffworks.com/auto-parts/brakes/brake-types/disc-brake.htm

9. http://auto.howstuffworks.com/auto-parts/brakes/brake-types/drum-brake.htm

10. http://www.roymech.co.uk/Useful_Tables/Drive/Drum_Brakes.html

11. http://www.roymech.co.uk/Useful_Tables/Drive/Disk_Brakes.html

12.http://www.howstuffworks.com/solar-cell.htm

13. http://www.aaue.dk/bm/ansys/fem-lesson13.pdf

ANNEXURE

SECTION ID NUMBER: 1

BEAM SECTION TYPE: Channel Section

BEAM SECTION NAME IS:

BEAM SECTION DATA SUMMARY:

Area	=	57.00
Iyy	=	.55574E+06
Iyz	=	0.18554E-09
Izz	=	9774

Warping constant	=	.87233E+08
Torsion constant	=	502.4
Centroid Y	=	1.976
Centroid Z	=	7.500
Shear center Y	=	11.887
Shear center Z	=	7.500
Shear correction-yy	=	.35714
Shear correction-yz	=	.24422E-14
Shear correction-zz	=	.41490

Beam Section is offset to CENTROID of cross section

SECTION ID NUMBER: 2

BEAM SECTION TYPE: Channel Section

BEAM SECTION NAME IS: channels

BEAM SECTION DATA SUMMARY:

Area	=	4.000
Iyy	=	285.3
Iyz	=	0.92371E-13
Izz	=	25.33
Warping constant	=	8694
Torsion constant	=	6.221
Centroid Y	=	.5000
Centroid Z	=	0.000
Shear center Y	=	1.2782
Shear center Z	=	0.000
Shear correction-yy	=	.30798

Shear correction-yz	=	0.58869E-14
Shear correction-zz	=	.52721

Beam Section is offset to CENTROID of cross section

SECTION ID NUMBER:	3
BEAM SECTION TYPE:	Channel Section
BEAM SECTION NAME IS:	3mmc

BEAM SECTION DATA SUMMARY:

Area	=	252.00
Iyy	=	36396
Iyz	=	0.63665E-11
Izz	=	22927
Warping constant	=	0.31067E+07
Torsion constant	=	768.94
Centroid Y	=	11.143
Centroid Z	=	15.000
Shear center Y	=	-10.456
Shear center Z	=	15.000
Shear correction-yy	=	0.56333
Shear correction-yz	=	0.39215E-15
Shear correction-zz	=	0.22851

Beam Section is offset to CENTROID of cross section

SECTION ID NUMBER:	4
BEAM SECTION TYPE:	Channel Section

BEAM SECTION NAME IS: 2mmc

BEAM SECTION DATA SUMMARY:

Area	=	172.00
Iyy	=	26489
Iyz	=	-0.56843E-12
Izz	=	16128
Warping constant	=	0.22979E+07
Torsion constant	=	232.91
Centroid Y	=	10.767
Centroid Z	=	15.000
Shear center Y	=	-11.332
Shear center Z	=	15.000
Shear correction-yy	=	0.54681
Shear correction-yz	=	0.94532E-13
Shear correction-zz	=	0.22700

Beam Section is offset to CENTROID of cross section