A

REPORT ON

PRACTICAL TRAINING

AT

HINDUSTAN ZINC LIMITED

CHANDERIA LEAD-ZINC SMELTER

CHITTORGARH (RAJASTHAN)

FROM:-25TH MAY to 27TH JUNE 2010

In partial fulfillment of award of Bachelor of Technology degree in electrical engineering

Rajasthan Technical University Kota.

ENGINEERING COLLEGE BIKANER

(AN AUTONOMOUS INSTITUTION OF GOVT. OF RAJASTHAN)

SESSION:- 2010-11

IN THE GUIDANCE OF

MR. D. K. GUPTA

Sr. Manager (electrical)

PYRO

Submitted To:-

P. Satpathy

(AGM, HR)

Submitted By:-

Devendra Joshi

B.Tech. IIIrd year

I n d e x

ACKNOWLEDGEMENT

The summer training at **VEDANTA HINDUSTAN ZINC LIMITED CHANDERIA** , **CHITTORGARH** has been a unique experience for me instead of routine and momentary exercise. It has leap to new field of acquiring knowledge and learning.

I acknowledge the kind of consideration of *Mr. P. Satpathy* in granting me permission for undergoing 30 days training at HZL. I am deeply in debuted to *Mr. D. K. Gupta* whose guidance and feedback during the course of the study helped me not only in bringing out his report successfully but also provided a real insight into student matter. I am also thankful to *Mr. U K Sharma*, *Mr. S K Mishra*, *Mr. M K Samota* and *Mr. John Methew* for being so helpful and providing us with valuable instructions and study material and also for kind cooperation and help. I shall be falling in my duty if I don't thanks *Mr. S N Somani*, *Mr. Snchit Jain* and all other employers who help me in providing various data and information that were needed to accomplish the end result.

My heartily thanks to *Mr. Vikas Sharma*, HOD electrical **and** training incharge *Mr. Nveen Paliwal* of **Engineering College Bikaner** for all kind of help they have granted in absence of which the training would have not been possible.

INTRODUCTION

There are many places in our country, where we get different types of metallic substances as raw material for industries. In these substances, the metals are present in compound form. These substances are called as minerals. Minerals are mostly present as oxides, sulphides, carbonates, chlorides and silicates. Those minerals from which we can get the metals conveniently and at low cost are called ores. Less reactive metals, as gold, silver, platinum etc. are obtained in free state in nature. Copper is basically obtained as copper pyrites ($CuFeS_2$). It is obtained from mainly the states Rajasthan, Bihar, Madhya Pradesh, Orissa, Karnataka etc. Iron is obtained from Hametite (Fe_2O_3), from the states Madhya Pradesh, Andhra Pradesh, Tamil Nadu, Karnataka, Goa, Maharashtra. Zinc is mainly obtained from its ore Zics Blende (ZnS) available mainly in the states Rajasthan and Orissa.

Plenty of minerals are obtained in Rajasthan. The Jawara Mines in Udaipur are famous as a source of zinc all over the world. Bhilwara , Beawar, Ajmer, Dungarpur, Banswara, and Tonk are the famous places as a source of mica. The minerals as obtained from these mines, after passing through various physical and chemical processes in the zinc smelter plant give pure metal. The mines that have been established for the extraction of these minerals are as follows:

1. Rajasthan,
2. Vishakhapatanam,
3. Tundu,(Bihar)
4. Sargipalli,
5. Agnikundala, and
6. Vijag zinc smelter.

There are mainly six plants of Hindustan zinc limited in Rajasthan, two of which are zinc smelter and four are the mines for the raw material. These are as follows:

SMELTERS:

1. Chanderia Lead Zinc Smelter,
2. Debari Lead Zinc Smelter,

MINES:

1. Jawara Mines
2. Rampura Agoocha Mines
3. Rajpura Dariba Mines
4. Maton Rock Phosphate Mines.

Aims of an industry:

1. To produce goods
2. To have continuous production
3. To produce goods at low cost
4. To produce goods of high quality
5. Have long life of equipment.

Problems/interruption with an industry:

1. Break Down
2. Power Failure
3. Industrial relation problem
4. Fire and Explosives.

Uses of Zinc:

1. Zinc Powder
2. Bras Items
3. GI pipes
4. $CuSO_4$

Uses of Lead:

1. Die Casting
2. Powder Cable 3. Battery.

PRODUCTION CAPACITIES

PRODUCTS	CAPACITY (TPA)
REFINED ZINC	70000
REFINED LEAD	35000
SULFURIC ACID	176000
SILVER	74
COPPER CATHODE / SULPHATE	2100
CADMIUM	375

MISSION OF CSZL :

- Be a lowest cost zinc producer on a global scale, maintaining market leadership.
- One million tone zinc-lead metal capacity by 2010.
- Be innovative, customer oriented and eco-friendly, maximizing stake-holder value.
- Refined zinc production capacity 69,000 tons per annum.
- Refined lead production capacity 85,000 tons per annum.

Continuous operational improvements, meticulous planning, constant innovation, extensive R&D, technological up gradation and so much more- HZL has come a long way and grown into a multi-unit and multi-product company.

Lead Bullion-	**Refined Lead**	**PW Zinc**
%Cu-0.70	%Zn-0.0010	%Pb-1.19 MAX
%Sb-0.20	%Cu-0.005	%Cu-0.015
%Ag- 0.20	%Bi-0.008	%Cd-0.0045
%Purity-98.5	%Fe-0.008	%Fe-0.0175
	%As-0.0010	%As-0.015
	%Sb-0.0012	%Sb-0.005
	%Ag-0.0028	%Ag-0.0025
	%Purity-99.9850	%Purity-98.7505

SHG Zinc-	**Furnace Zinc-**
%Pb-0.0014	%Pb-1.31
%Cu-0.0001	%Cu-0.0152
%Cd-0.001	
%Fe-0.0011	%Fe-0.0166
%As-0.0001	%As-0.0216
%Sb-0.0001	%Sb-0.0025
%Ag-0.0001	%Ag-0.0046
%Purity-99.9961	%Purity-98

Location and Condition:

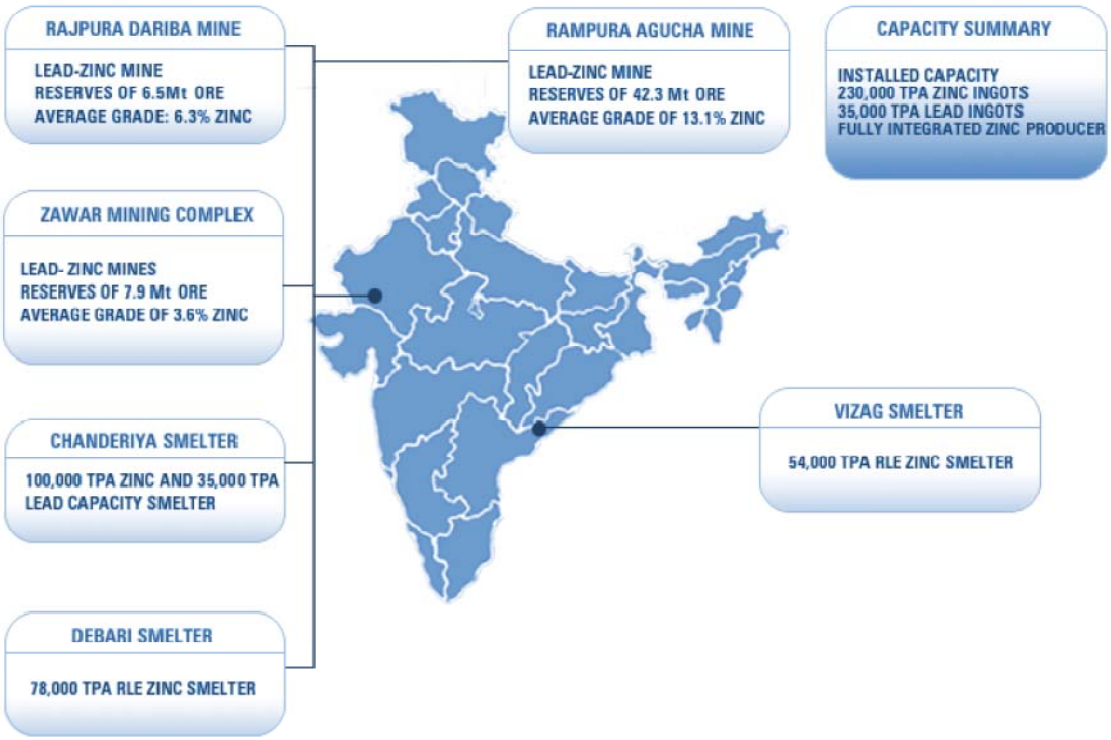

LOCATION OF HZL PLANTS IN INDIA

Chanderia Lead Zinc Smelter(CLZS) is the plant inaugurated by the late Prime Minister Sh. Rajiv Gandhi in year 1989. It is located on the state highway no. 79. It is nearly 10 km away from chittorgarh city. The total cost involved in the construction was 5$ million.

CLZS is the largest plant of zinc smelting in asia both in production and quality. It is having an area of 3.25 hectares. The plant has recently been privatized and has gone in the private hands of Mr. Anil Agrawal, the head of Sterlite Company. One dispensary and canteen is also there for the employees and workers.

The mineral ore for this plant is obtained from the Rampura, Agoocha and Jawar mines and the water supply is obtained from the Gosunda dam and due to shortage of water in dam this year water is being supplied through tankers.

CLZS has been designed for a total connected load of 37965 KW against a total connected demand of 19 MVA was with RSEB to supply power at 132 KV from Chittorgarh GSS. To meet an uninterrupted power supply for the operation of plant, a 20 MW diesel generating plant was installed keeping four generators of 5 MW capacity each.

A separate safety department is also present in plant to prevent the unsafe conditions. Safety education & training is imparted to all the trainees before starting the training.

HZL recognizes its responsibilities as a good corporate citizen and it is a cardinal principal of management philosophy to comply fully with the statutory regulations for environmental protection and pollution control at its various units. For this purpose, it is having environmental protection and pollution control unit.

Division of Training period:-

The whole training period has been divided into four major parts. These are:

1. Sinter plant
2. Zinc Circuit (ISF & ZRP)
3. WSS (Work Service Sub-station)
4. Lead Circuit(LRP & Ausmelt)

SAFETY

What is Safety:-

S- Sound thinking concerning the nature of job.

A- Alertness to anger.

F- Factorizing the entire operation into safe sequence.

E- Efficiency in carefully performing the work.

T- Thoughtfulness for the welfare of the group in which the worker is attached to.

Y- You and your protection at your job.

Accidents is most unwanted interruption because it involves human life and the main effects of accidents are :-

1. Stopping of production
2. Human suffering
3. Loss of good skilled employees
4. Material loss
5. Demoralizing effect on employees and society
6. Legal proceeding
7. Harassment to management
8. Compensation

Safety Materials:

1- Safety Belt 2- Safety Shoes 3- Ear Muff 4- Face Shield 5- Helmet

6-Ear Plug 7- Safety Glass 8- Breathing Set 9- Acid proof glass

10- Air stream helmet 11- Dust and gas mask.

Safety precautions should be taken by Electrical Engg. trainees at CLZS are as follows:-

1. Always wear the protective helmet in plant.
2. Do not wear the loose and nylon clothes.
3. Always wear rubber and strength shoes.
4. Do not roam in the plant without any supervision of instructor.
5. Do not touch any machine or switching parts.
6. Always keep distance from fast moving machine.
7. Do not visit silver refinery and acid plant without any written permission.
8. Always wear ear mask in plant because heavy machines produces huge noise which is very harmful to ears.
9. Always wear mouth mask in plant because certain poisonous gases like CO, SO_2, CO_2, smoke dust etc. are very harmful for human health.

ABBREVATIONS USED

ABBREVATIONS	FULL NAME
HZL	Hindustan Zinc Limited
CSZL	Chanderia Zinc Lead Smelter
AVVNL	Ajmer Vidhyut Vitran Nigam Limited
ISF	Imperial Smelting Furnace
ZRP	Zinc Refinery Plant
LRP	Lead Refinery Plant
WSS	Work Service Sub-station
PCC	Power Control Center
MCC	Motor control center
MLDB	Main Light Distribution Board
SHG	Special High Grade Zinc
GOB	General Ordinary Brand
WGP	Wet Gas Precipitator
HGP	Hot Gas Precipitator
PPE	Personal Protective Equipment
CB	Circuit Breaker
CT	Current Transformer
PT	Potential Transformer
DG	Diesel Generator

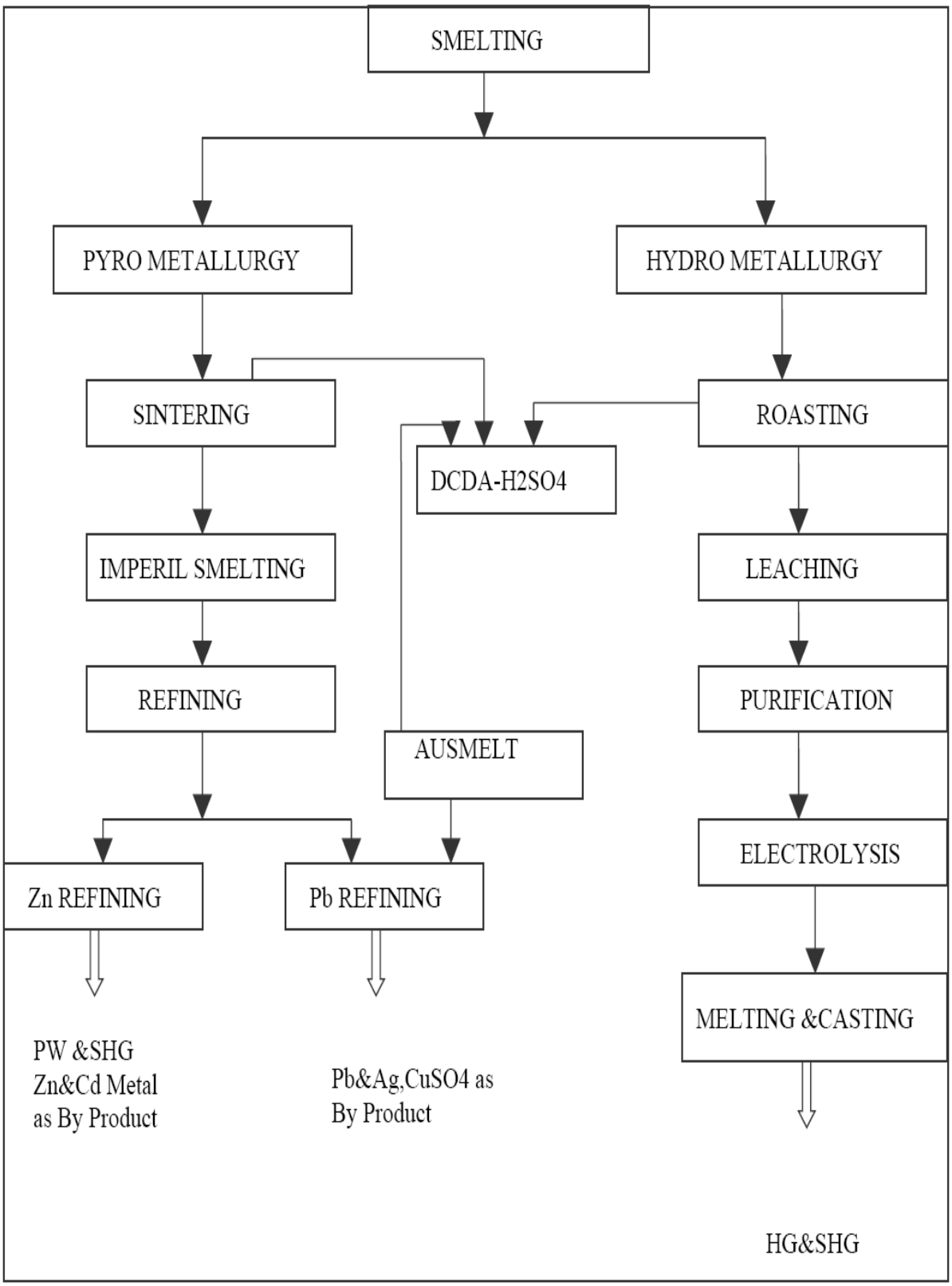

.PROCESS OF HZL

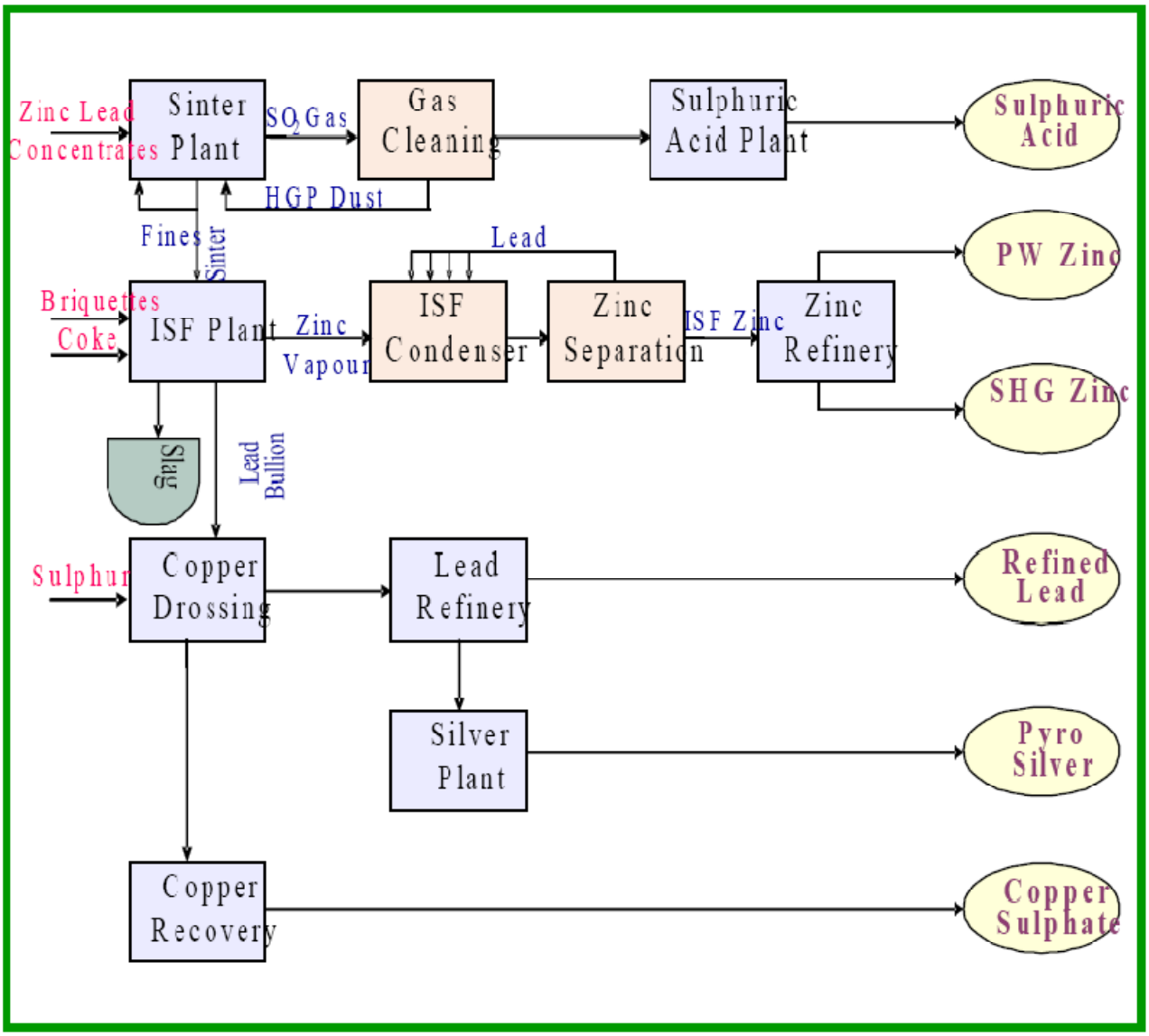

PROCESS FLOW DIAGRAM PYRO PLANT

SINTER PLANT

The sinter plant has following main sections:

1. Raw material stockyard with unloading station
2. Charge proportioning and conditional system
3. Sinter machine
4. Sinter and return fines handling
5. Gas cleaning and room ventilation
6. Slurry handling

Raw material stock yard with unloading stations:

Concentrates and fluxes are unloaded from the trucks into grizzly. The unloading systems of belt conveyors take the material to the respective bay in the storage yard through the tripper conveyor. The capacities of various materials and fluxes bay are as follows:

Zinc concentrates (total)	9450 MT
Bulk concentrates	3500 MT
Lead concentrates (total)	7500 MT
Lime stone fluxes	450 MT
Iron fluxes	700 MT

From the above storage yard the material are carried to proportioning bins by a series of conveyor system.

Charge proportioning and conditioning system:

The raw materials can be made to pass through a disintegrator when they are oversize. There are 13 storage bins each having a capacity of 50 bulk concentrate, one for iron flux and two for limestone are earmarked in that order. Lastly, two bins with

capacity of 25 Cu.M. are provided for return fines. All bins are equipped with vibrators and shock cannons to prevent blockage. Generally, the ratio between crude charge and returned fines will be in the range of 1: l3 to 1:5 in order to have a sulphide sulpher of 6% in the feed to sinter machine. Plant ventilation dust, which is removed in a beg filter and stored in a 35 Cu.M. bin are being added to the final stream of the charge component entering the mixing drum. Moisture addition is done in a controlled way at mixing and conditioning drums so as to get moisture content of 6% in the feed to sinter machine. All the various sources of input are controlled through weight feeders located at the bottom of the proportioning bins.

Sinter Machine:

The updraft sinter machine has an area of 120 sq. m. and 109 pallets each measuring 3 m x 1 m in size. There are 444 grade bars in a pallet. Above the sinter machine, the main ignition layer bins are located. The total layer thickness maximum is up to 400 mm. the ignition layer is fired by two burners operating at LHLS. To get about 1000 ^{o}C hood temperature. The ignition gasses are drawn by the ignition waste gas fan through the wind box and conveyed to re-circulating gas mains. Dust and spillage are removed in a solid separator. The ignition wind box is equipped with two conveyors which are to seal and discharge the spillage to the sinter machine dust-collecting truck.

From the sinter hood the rich SO_2 gasses are drawn and send to wet gas cleaning plant through a HGP with the help of booster blower. Beside the ignition fan, there are three fresh air fans and one recirculation fan supplying fresh air and re-circulates to 17 wind box of the sinter machine. The gasses above the both updraft wind boxes are low in SO_2 extremely humid and at low temperature. These gasses are mixed with hot gasses from the discharge end of the sinter machine and re-circulated to the last three wind boxes at the discharge end of the sinter machine. There are five cyclones for dust removal of ventilation air and re-circulating gasses in order to avoid any dust buildup in the ducts and also avoid the wear of the fans.

Sinter and return fines handling:

The lumps discharge from sinter m/c at 800 ^{o}C are first crushed by a claw breaker up to about 250 mm. a vibrating feeder feed the materials to a spike roll crusher to get particles of size 130 mm which are conveyed to vibrating feeder and rose classifier. The 65-130 mm fraction is sent to ISF by a tray conveyor. The 7- 67 mm fraction from classifier is sent to an intermediate bin. From here the material can either go to intermediate storage or to crushing circuit for return fines. In the return crushing circuit the material goes to a corrugated roll crusher and smooth roll crusher through vibrating feeders to get a size less than 8 mm. the finally crushed hot material is sent to cooling drum where the bay house dust is also added. The cooling is

accomplished by addition of different slurries generated in ISF plant, Cadmium plant, copper plant and industrial water. The moisture content of the cooled material is in the range of 2-3% and this material is carried back to the sinter proportioning plant.

Ventilation System:

The dry ventilation gasses from all machines, belt conveyors and material transmission points are cleaned in a central bag filter. The mixing and cooling drum dusts are removed at above 100 ^{o}C by a burner system and the gasses are deducted in a separate bag filter. The removed dust is sent to return fines circuit.

Ventilation gasses and vapours from the return fines bins are treated in venture scrubber units. The washed gasses are vented after passing through hydro clones. The wash solution is collected in an agitated tank from where the solution is re-circulated to the venture scrubber units.

Slurry handling:

In general, the slurry received from ISP, cadmium plant and copper plant are treated in agitated tanks and feed into cooling drums. The various slurry-plants units are located in the crusher building.

Re-circulating Fan:

The main uses of re-circulating fan as depicted above are ;

1. It is used for reutilization of the heat of SO_2 gas and supply it to bed again.
2. It is used for cooling purpose.

The electrical ratings of the re-circulating fans are as follows:

Specification:

Power Rating:- 630KW at 1000 rpm

Main Supply:- 11 KV, 3 Phase, 50 Hz

Supply tolerance:- +/- 12%Voltage, +/- 3%frequency

Ambient Temperature: +/- 45°C, max for motor; +/- 40 ^{o}C for all other equipments

Relative humidity: 97% max

Altitude: 399 Meters A.S.I.

Motor details:

Frame size: NA400/34-6 pole

Output: 630 KW

Supply: 660 V, 3-phase, 50 Hz.

Full load speed: 991 rpm

Full load current: 699 amperes

Insulation stator: class F

Mounting type: B3

Transformer details:

Free standing, indoor, 3- phase, 50 Hz, Oil cooled, double wound.

Pattern: standard ONAN indoor, vermin proofed and tropalised

Rating; 858 KVA

Voltage ratio: 11000/660 V +660 V between phases on load

Connections: Delta/star, 30 degree phase shifted

Adjusting tappings: +/- 5%, +/- 2.5%

Power distribution in sinter plant:

The power distribution in sinter plant is divided in the following main to parts;

1. Power Control Centre (PCC)- above 11 KV
2. Motor Control Centre (MCC)- above 440 V

POWER CONTROL CENTRE:

There are two main incomers in PCC connected by a bus coupler. When the supply from an incomer is cutoff, we can continue the supply from another incomer. If both the incomers are alive, we just the load on both side such that it is uniformly distributed on both side.

We get supply at 11 KV from WSS and it is stepped down by the help of a transformer of rating 11000/440V. The supply to MCC is given at 440 V. We use two incomers in PCC and MCC, so as to get a continues supply. In this way, supply from main bus bar has been divided into two parts. By these two incomers, we get four incomers. Thus, we get two incomers (in PCC) and four incomers (in MCC) from these two incomers. We can run the plant by any one of these two incomers. For example, if one incomer is dead, we connect it to the bus coupler and if both incomer are dead. We get them changed from the other PCC and by connecting one of the incomer of MCC to bus coupler, we get run the plant continuously.

Motor control centre:

The supply in MCC is 440 V. the supply from PCC is feed to MCC at 440 V. in this, a separate feeder is used for each motor. We generally use the following devices between the feeder and motor for giving supply to the motor;

1. Relay
2. Conductor
3. Fuse
4. Isolator
5. Circuit Breaker
6. Rotary switch

The ratings of the above devices depend on the type and capacity of the motor used. The conductors which are used in the MCC are as follows:

1. ML-2	32A	75KW
1. ML-4	70A	22KW
1. ML-6	100A	37KW
4. ML-12	250A	110KW

Machine used in sinter plant:

There are mainly 18 D.C. motors and about 300 A.C. motors used in this plant and the rating of these motors varies from 1 ti 260 KW. In this, 5 motors are H.T. . the motors used in SO_2 blower is of 2600 KW and it works at 11 KV. These motors is the largest motors used in the wholt plant and it was also the largest motor in rajasthan when established. This motor is basically used as a gas precipitation and dust dirt and other unwanted particles are removed from the SO_2 gas. There are mainly the following two gas precipitation, namely :

1. Hot gas precipitator

2. Wet gas precipitator

In hot gas precipitator (HGP), a motor of 2600 KW is used as a blower is coupled with its shaft. A high supply of 50 KV is given in this process. There are two electrodes, one is positively charged and the other one is negatively charged. The positive plate is earthed whereas by giving a high potential to the negatively charged plate, the positively charged dust particles get attracted towards it. This impurities are removed by hammering the plate.

In wet gas precipitator (WGP), a DC machine of 25-30 KV is used. By giving supply to it, we spray water on the mixture of SO_2 and dust. By this process, SO_2 gas gets cleaned, as the dust particle are washed out. The SO_2 gas is sent to acid plant. In acid plant the SO_2 gas is reacted with the water in the presence of catalyst and sulfuric acid is obtained. This process confirms the proper use of SO_2 gas as releasing it in atmosphere can give very hazardous results for ecological balance. The SO_2 gas is first oxidized in the presence of catalyst so that SO_3 gas is produced. This gas is then reacted with water to obtain sulphuric acid. The acid thus obtained is stored in four big containers each of capacity 6000 metric tons.

Gas precipitators:

Electrical ratings of precipitators:

INPUT	**HGP**	**WGP**
Primary side		
Voltage (V)	415	415
Amperes (A)	327	67
OUTPUT		
Secondary side		
Voltage (V)	415	415
Amperes (A)	1600	400

Rating Capacity:

The rating of any machine depends on the type of cooling used in it. There are mainly two types of cooling:

1. Air cooling 2. Water Cooling

The water cooling can be of two types, Oil Natural Air Natural (ONAN) and Oil Natural Air Forced (ONAF). In ONAF, air is forced on the motor so that its surface gets cool down and a better insulation is obtained and it can draw more current and so, its rating is increased.

There are 19 feeders in PCC of the sinter plant and these are as follows:

1. SO2 Blower motor
2. 1.6 MVA TRS-3 (for 522 I/C-1)
3. 630 KVA TRS
4. Spare
5. 1.6 MVA TRS-1
6. 11 KV- II/C-I
7. Line PT sec-I
8. Bus PT Sec-I
9. Bus-coupler
10. 1.6 MVA TRS-1 Acid (for 501 I/C-1)
11. 1.6 MVA TRS-1 Sinter (for 501 I/C-1)
12. Spare
13. 11 KV- II/C-I
14. Line PT sec-II
15. Bus PT Sec-II
16. Spare
17. 1.6 MVA TRS-2 Sinter (for 502 I/C-1)
18. 11K/660V TRS of Re-circulating Fan
19. Spare.

Ratings of SO_2 Blower :

KW	2600
Stator current	162 A
Stator voltage	11KV
Rotor voltage	1680 V
Rotor current	940A
Power factor	0.85
Capacitor bank	750 KVA
Cooling type	Baba cooling
RPM	1490
Insulation class	F
Phase	3
Frequency	50 Hz
Ambient temperature	45 ^oC
Rotor type	Wound

Fresh air fan:

The fresh air fan is used to blow fresh air when needed in the plant. The fresh air fan motor operates at 300 V and step down transformer of rating 11000/300 V is used to obtain the required operating voltage.

Electrical rating of Fresh air motor:

Stator current	56 A
Stator voltage	300 V
RPM	1480
Insulation class	F
Phase	3
Frequency	50 Hz
Ambient temperature	45 ^oC

Features of sinter plant:

The main features of sinter plant are:

- Design of bins for free flow of material
- Complete recycling sinter machine gasses
- Incorporation of two ross classifier
- Inproved design of smooth roll crusher

Sinter crushing and screening:

The desulphurised and agglomerated sinter miz tips from the end of the sinter machine in massive lumps, which are crushed and sieved to a grain size less than 130 mm. the fractions 40 to 130 mm are employed to two sinter storage bins in ISF plant. The fine material fraction(8-40 mm grain size) is further crushed to less then 8 mm before being used at return fines.

The composition of lump sinter which the end product of sinter olant and raw material for Imperial Smelting Plant (ISF) are as follows:

Zinc: 38-42%

Lead: 19-22%

FeO: 9-11%

Sulphur <1%

CaO 4-5%

SiO_2 3-4%

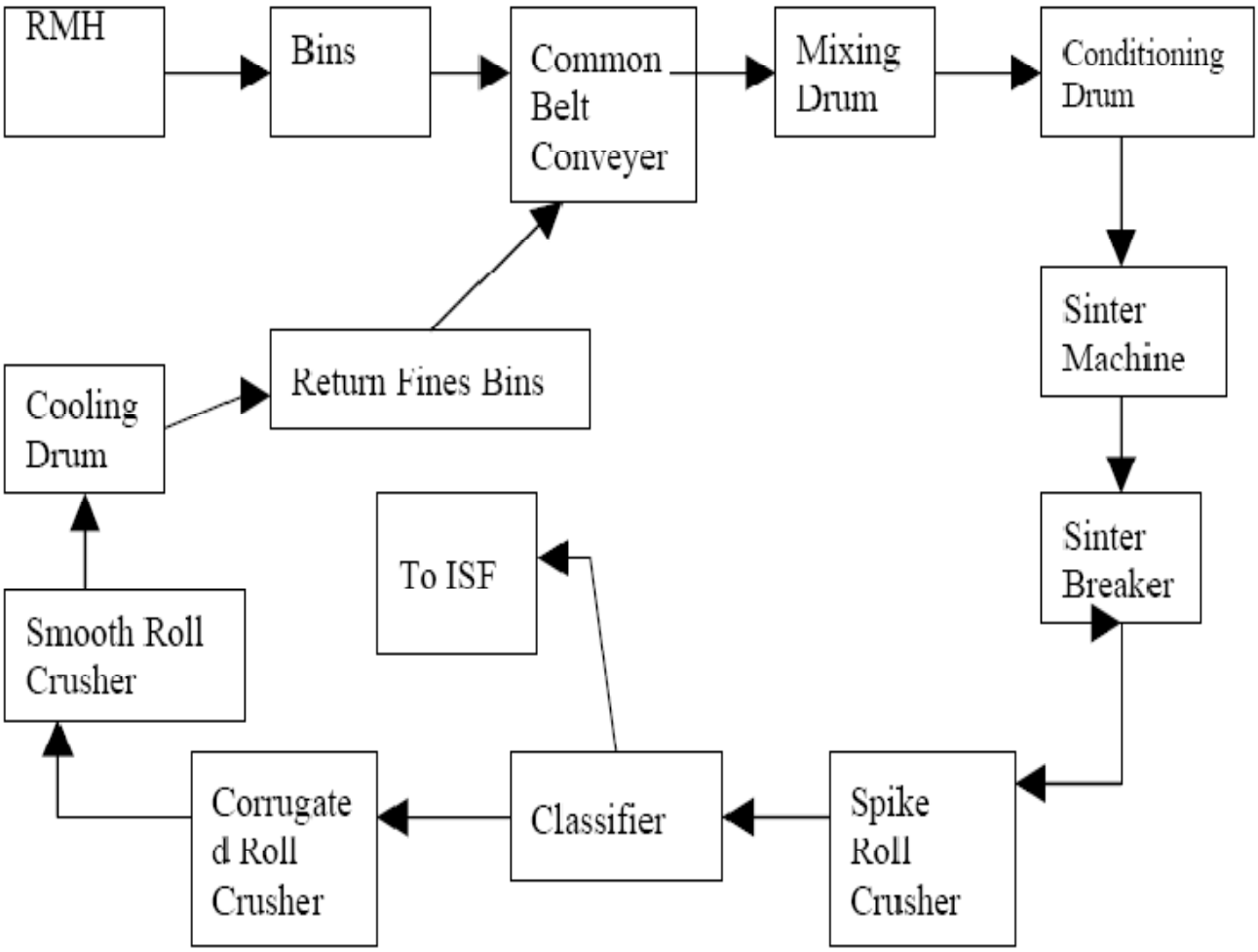

PROCESS FLOW CHART OF SINTER PLANT

Zinc Circuit

The zinc circuit divided into two parts:

1. Imperial Smelting Furnace (ISF)
2. Zinc Refinery Plant (ZRP)

Imperial Smelting Plant:

The ISF is one of the plants in the CLZS. In this plant, the small sized clinkers coming from sinter are melted and lead, silver, zinc copper, etc. are obtained in their impure form. These impure metals are then sent to refinery plant in order to obtain the highest purity form.

Process:

In sinter plant, the raw material after conveyed through belt, is mixed with water and heated in a furnace. It forms spherical shaped clinkers of size about 25-30 kg. After this, these objects are subjected to hammering in a big machine and small sized products of 1-2 kg are formed.

In ISF, these clinkers are kept in sinter bins of capacity 300 tons. There are two bins, one is the left and other is right. After this, these sinter products reaches the screen feeder and are stored in way hopper, which works as small storage having a capacity about 5000 kg. Its control system is so adjusted that it remains open for a definite time period and it closes as soon as it fills completely.

The coal required for combustion is stored in coke yard and is transferred through cold coke bin. This coke is sent to coke screen feeder. The coke is pre-heated at a temperature of 400-500 ^{o}C. the CO gas is obtained from this heating. This gas, after purifying is used in different purposes and rest of the gas is left in atmosphere through chimney. The chimney is of enough height keeping the hazards of environmental pollution in mind. The hot mixture is then sent to vibrator. After this, it is kept in weigh hopper, which have stoves inside. After this, this mixture is kept in two out four buckets and transferred through the transfer car into the furnace. The period of transfer is fixed. The car stayes for about 20 minutes near the buckets.these two buckets goes to the furnae by the car and comes back again after emptying the material into the furnace and process continues.

Air is blowed into stove by the help of a 1800 KW blower. Enormous amount of heat is obtained by firing the air. This red hot air is sent to the

furnace. In the furnace, this hot air and the material from buckets is taken into charging gear. this consist of two parts, the upper one and the bottom one. The upper part, is open and the material from car is emptied here. The car goes out again and the hot metal goes into the bottom. Due to the high temperature, the zinc gets vapourized. The zinc vapours that are at 1025 ^{o}C are sent to the condenser where the vapour gets liquefied. Actually, the lead filled at the bottom of the condenser works as the cooling medium for the zinc vapours. The mixture of lead and zinc is stirred by the help of 8 AC motors. The type of cooling in these motors is water cooling to prevent their bearings from getting heated up. Out of these 8 motors, 4 are of 75 KW and rest are of 55 KW. The shaft of the rotors of the motors is attached with a stirrer that mixes the two metals. The mixture is then sent to launder through motor. There are three lead pumps in it. Cooling fans are present in these pumps, which can be immersed in fluid according to the extent of cooling required. Lead and zinc mixture at 440 ^{o}C has minimum solubility. The lead being heavier than zinc follows bottom. The zinc flowing at the surface is separated through seperater bath. This is mixed with NH_4CL and sent to zinc refinery. The lead remains in bottom is sent to lead refinery.

There are some more impurities which are removed as sludge. The dross(mixture of zinc and lead) is charged in breaking plant and its brackets are formed.

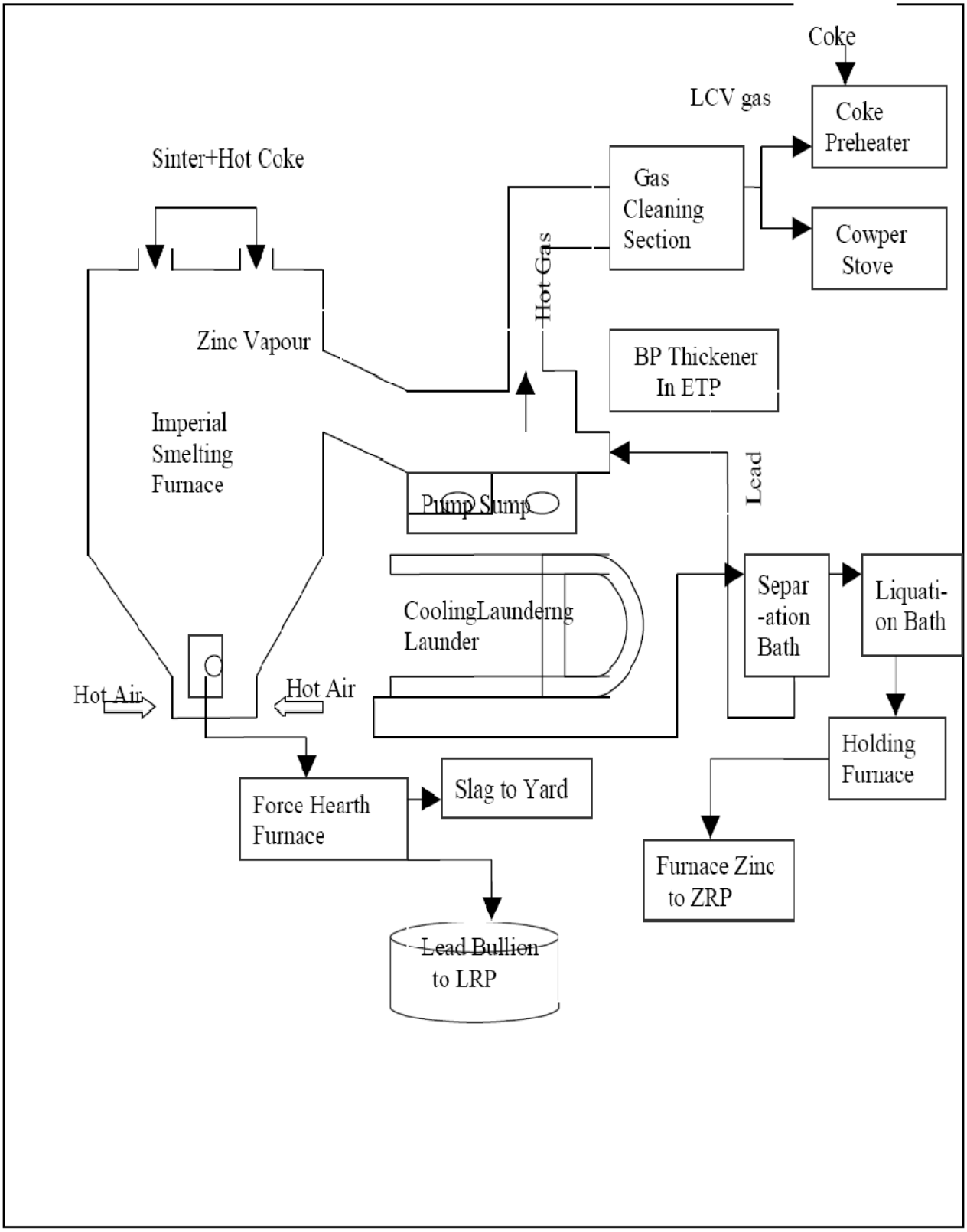

Process Diagram ISF

Electric Supply in ISF:

The whole electrical supply in ISP can be divided into two parts, MCC and PCC. The ISF is operated by a main control room and electric supply is given to different feeders through this control room. The supply at 11 KV is obtained from WSS. Four transformers of rating 11000/440 V are there in ISP. There are two incomers connected by the help of bus coupler.

Feeders of ISF:

There are mainly two PCC, represented by 502 and 506. There are 35 feeders in 502, through each of which a machine is fed in the same way, 37 feeder in506. In both PCC, there are two incomers I and II connected with the help of bus coupler. There are two feeders in each compartment to which two machine are connected.

The main feeders in PCC-502 are:

1. Soft Water Returning Pump (180 KW)
2. Zinc Refinery
3. Recycle Cold Water Pump (172 KW)
4. Spare
5. MCC- 510 I/C- II
6. Overhead Tank Supply Pump (200 KW)
7. MCC I/C- 509 I/C- II
8. Overhead Tank Supply Pump (200 KW)
9. MCC 508 I/C-I
10. Furnace Essential Supply MCC 505 I/C –I
11. Interconnected To 506-PCC
12. MCC 513 I/C-I
13. Main Lighting Distribution Board (MCDB-II)
14. Comb. Air Fan (160 KW)
15. Reserve
16. Spare
17. Incomer-I From 11 KV From WSS
18. AC Control Bus Selector Switch
19. Bus Coupler- 502
20. SOFT WATER RETURN PUMP (180 KW)
21. Zinc Refinery
22. Crane Supply MCC 512 I/C- II
23. Overhead Tank Supply Pump (200 KW)
24. PCC- 507 I/C- II

25. Soft Water Return Pump
26. Laboratory
27. Recycle Cold Water Pump (180 KW)
28. ACDB –II
29. Spare
30. Reserve
31. I/C –II From 11 KV From WSS
32. Special Crusher
33. Utility Option 204
34. Furnace Essential Supply MCC-505
35. Furnace Essential Supply MCC- 513 I/C – II

Motors used in ISF:

In ISF, there are two very large motor, one of 1800 KW and other of 1000 KW. There are mainly 5 HT motors in ISF. The two motors as mentioned above operate at 11 KV, where as the other three motors are of 350 KW and operate at 3.3 KV.

One HT motor named Thyson motor is used in ISF and its power output is 1000 KW . its main function is to blow air in the smelting furnace. The forced air from this motor is sent to stove, and by firing we get an immense amount of hot air, which is used to smelt a metal. The red hot air is sent to the furnace and the mixture of lead, zinc etc. is subjected to extraction process after which zinc, lead etc. are separated from each other and sent to refinery plant.

Electrical rating of Thyson motor:

OUTPUT	1000KW
Amperes	74 A
Power Factor	0.84
RPM	793
Pole	8
Phases	3
Frequency	50 Hz
Insulation Class	f
Altitude	MCR
Starting current	%F.L. 150
Lubricant	150 VC VT
Mass	108763 Kg

Electrical rating of ISF blower motor:

Output	1800 KW
Volts	11 KV
Starting Current	% F.L. 150
Connections	Star 6T (terminals)
Rotor O.C.V.	1660
RPM	1489
Poles	4
Power factor	0.84
Frequency	50 Hz
Phase	3
Insulation class	F
Ambient temperature	45 ^{o}C
Altitude	400 m
Temperature rise	75 ^{o}C
Mass	12630 kg

Phase sequence:

For clockwise rotation, when viewed from the drive end, the terminal phase sequence is U, V, W. for anticlockwise rotation when viewed from the drive end, the terminal phase sequence is W,V, U.

Features of ISF:

ISF plant comprises of charge preparation and furnace charging, imperial smelting furnace, condenser, copper stoves, gas washing, low calorific value distribution system and briquetting plant.

The furnace has a 21.5 sq. m shaft area. The coke preheated to 800 ^{o}C is fed along with agglomerated hot sinter, briquettes and other process wasted at the top of the vertical shaft furnace through a double bell charging system. The blast preheated in copper stove to 1000 ^{o}C is admitted through 18 water cooled tubers at the bottom. The copper stock is heated by burning the waste LCV gasses leaving the furnace. A briquetting plant with a capacity of 14000 tons briquettes per ear enables treatment of fine drosses and accretion arising from various plant section. The furnace is design to produce both zinc and lead together.

Production of ISF Lead:

Molten lead tricking down the bottom of the furnace is tapped together with a slag of molten gang materials. Lead Boolean and slag are tapped from the furnace on batch basis through a water cooled copper tapping block. However, the design permits installation of continuous tapping system. Bullion is separated in a forehearth from slag which is granulated before disposal. Molten bullion is transfers bt 10T ladle to

copper drossing section for removel of copper from where the bullion is taken to lead of 99.99% purity.

Production of ISF zinc:

At the top of the furnace, zinc vapours are shock cooled and absorbed in a spray of molten lead in the condenser attached to ISF. Molten lead containing absorbed zinc is pumped out of condenser into an adjacent cooling launder from above. Molten zinzy lead is cooled down from 530 ^{o}C to the temperature of apporx. 440 ^{o}C which is the temperature at which zinc and lead are minimum soluble in each other. Zincky lead enters into the separation bath. From this bath, zinc continuously overflows via a V-notch into an adjacent liquation bath under an overflow weir and then into a return launder leading back into the condenser. The furnace zinc thus produce is sent to zinc refinery for further refining.

The waste gasses leaving the condenser are passed into a gas cleaning system, where these are cooled and cleaned. Cleaned gas containing CO have a low calorific value (LCV), which is utilized for preheating the furnace blast air and coke.

Zinc Refinery Plant (ZRP):

The raw zinc supplied by imperial smelting furnace (ISF) is refined in ZRP. The main objectives to refine raw zinc of ISF are :

a) High impurity of Cd which is not desirable for galvenising.
b) Occasional high arsenic and iron impurity content.
c) Most important is to produce super special high grade zinc containing plus 99.9950 % of zinc. This is used by electronic and medicine industry for making special alloys and medicines respectively.

Process description:

General:-

The raw zinc from ISF is refined by double distillation process in the New Jersey type distillation columns. The first distillation separates the zinc and cadmium from a mixture containing the less volatile metals and in second, the pure zinc is separated from mixture containing cadmium. This cadmium zinc alloy is refined in baby column. The plant can be divided into following section:

1. ISF zinc handling and casting unit
2. Raw zinc storage and feeding unit
3. Lead column system
4. Cadmium column system
5. Liquation furnace

6. Arsenic treatment furnace
7. PW holding furnace and casting
8. SHG holding and casting unit
9. LPG- AIR mixing unit
10. Oil handling furnace
11. Fume treatment installation
12. Combustion blowers
13. Chemical analysis of input/output

Production of Refined zinc:

The process of refining the zinc metal in zinc refinery is based on the physical properties of such metals such as volatilizing temperature, density and solubility in different phases. The ZRP comprises the following facilities:

- Storage and feeding furnaces
- Lead and cadmium columns, baby columns
- Liquation and holding furnaces
- Melting and casting arrangements

This facility assures the production of general ordinary brand (GOB) grade zinc with 99.99 % purity.

The ISF zinc is first fed to the lead columns which consists of silicon carbide trays and bricked combustion chamber. The temperature of combustion chamber is maintained to about 1100 ^{o}C, where zinc and cadmium more volatile get vapourised. The lead and the part of zinc tricles down in lead column sump, which is free of cadmium metal. This metal is cooled and after separation of heavy lead metal is cast as GOB zinc which is free of cadmium.

The vapourised zinc containing whole of cadmium metal is condensed in silicon carbide condenser and is again fed to cadmium column, where temperature is maintained at about 1000 ^{o}C, where the wall of the cadmium, which is more volatile than zinc gets vapourised and Special High Grade(SHG) zinc tricles down in cadmium column sump and is cast as SHG zinc.

The vapourised zinc cadmium alloy after condensation is fed to the baby column along with caustic cadmium produced in cadmium column. This is a refining step where accurate temperature enables production of 99.99% of pure cadmium metal.

Main uses of zinc:

- In Galvanizing Process
- In Production Of Brass Items
- It Is Used As Zinc Power

Work Service Sub-Station (WSS)

The supply from Ajmer Vidhyut Vitaran Nigam Limited (AVVNL) is coming to WSS through Aluminum conductor Silicon Reinforced (ACSR). Then, supply is distributed through cables to the different parts of the plant. These cables may be underground or overhead. There are different type of cables according to different voltage and current demands. There are single phase supply for lighting and 3 phase supply for remaining places. WSS get 132 KV supply from AVVNL. There are steel pillars with ACSR conductors.

Insulators are used here, which have strength and suspension properties. Each insulator is used for 11 KV so there are 12 insulator used for 132 KV. Arcing horns are attached here, so that the conductors may not damage.

The supply of 132 KV is coming through lightening arrester (LA). There are 3 LA for 3 phases. The main function of LA is to limit the surge voltage to a safe value by discharging the surge current to ground. The supply then goes to isolator-1. Isolator-1 can be handled manually or automatically, and it cut off the supply on no load. There are 3 more isolator with this isolators. Now the ckt. is divided in two parts each for one transformer. If any fault occurs in transformer-2 then we can continue the supply by using isolator-5 with transformer-2.

Now supply goes to SF_6 (Sulphur Hexa Fluoride) ckt breaker. It has high absorbing power to absorb the sparkling. If any fault occurs then it get tripped automatically. Very high sparkling occurs in tripping of SF_6 ckt breaker and SF_6 gas absorbed this sparking and protects the device. There is a level indicator of SF_6 gas so we maintain a definite quantity of SF_6 gas. We can use isolator in place of SF_6 ckt breaker but it takes more time and need manually or handling or machine to use it. Therefore, we use isolators in major problems such as shut down only. Circuit breaker needs some medium to absorb the sparking but isolator does not need any medium.

The main equipments used in the switchyard are as follows:

1) Main transformer (20/25 MVA)
2) Lightning arrester
3) Air break isolator
4) SF_6 circuit breaker
5) Current transformer
6) Potential transformer
7) Capacitor bank and series rector
8) Distribution transformer

The description of the above equipments are given below:

Main transformer(20/25 KVA):

This is the main transformer that is used in the switchyard and is used to step down the supply voltage from 132 KV to 11 KV. Actually, two transformers are used in the yard and supply is distributed to different parts of the plant with the help of distribution transformer.

If we want to drive only one transformer then we isolate the other circuit by using isolator. After supplying the transformer, the supply goes to capacitor bank and then goes to 11 KV and 3.3 KV feeders in control room then it is distributed to whole plant. Two transformers are used in 132 KV switchyard. Only primary and secondary windings are used whereas tertiary winding is earthed to compensate third harmonic effects.

Ratings of main transformer:-

MVA	20/25
KV (No Load)	H.V. - 132 KV I.V. – 11.5 KV L.V. – 6.9 KV
Amperes	H.V. – 87.5/109.3 I.V. – 1004/1255.1 L.V. – UNLOADED
Phase/Frequency	3/50Hz
Type Of Cooling	ONAN for 20 MVA ONAF for 25 MVA
Ambient temperature	Oil- 40 ^{o}C Wdg. – 45 ^{o}C
Connection symbol	YNYNOD 11
Untaking mass (core & winding)	24000 kg
Total oil (kg/litre)	15600/17800
Total mass	57000 kg
Heaviest package	With oil- 43100 Without Oil- 32000
Insulation	F

Type of cooling:

ONAN:- Oil Natural Air Natural

ONAF :- Oil Natural Air forced

ONAN cooling is used for 20MVA and ONAF is used for 25 MVA transformers. Exhaust fans provide forced cooling. The supply goes to PCC through cable room and it is of 11 KV. Then supply goes to MCC, which is of 3.3 KV then goes to additional four transformers. Two of them are used as 11 KV/3.3 KV and two are of 11 KV/ 440 V.

Relays of main transformer :

1. Non- directional over current relay- HV (A-phase)
2. Non- directional over current relay- HV (B-phase)
3. Non- directional over current relay- HV (C-phase)
4. Instantaneous adjustable current relay
5. Transformer differential relay
6. Definite time over current relay
7. Earth fault protection relay- HV
8. Earth fault protection relay- LV
9. Non- directional over current relay-LV (A phase)
10. Non- directional over current relay-LV (B phase)
11. Non- directional over current relay-LV (C phase)
12. Reverse power relay
13. Standby earth fault relay
14. Tripping relay (reverse power protection)

Lightening arrester :

Application:

Arrestors are design to limit surge voltages to a safe value by discharging the surge current to ground and to interrupt the power frequency follow current. The ability to interact power follow current is limited to applications where the power frequency voltages at the arrestors never exceeds the arrestor's continues or short time ratings.

Discharge counter:

Discharge counter moniters the leakage in grading current of the arrestor and also logs the total no. of arrestor operation. The meter provided in the discharge counter is not meant for absolute measurement of the leakage and grading currents. The effective use of the meter is made to note the change in the grading current. The grading and leakage current should be noted down initially under dry and clean condition, when for all practical purposes, leakage current can be assumed to be low.

Air break isolator:

General:

The air break isolators are used in both indoor and outdoor substation either in conjunction with a breaker or independently to work as an off- load disconnecting device. It is complete with operating handle-connecting vertical down-take pipe etc and may be provided with earth switch, electrical interlock and auxiliary switch whenever desired. The operating mechanism is manually or operated having arrangement for locking in both open & closed position.

Use:

If we are required to work on an apparatus in faulty state, the apparatus is disconnected from mains by the help of isolator. As soon as isolator is opened, the earth switch gets closed due to which all other voltages on line gets earthed. Isolator and earth switch are so connected that opening the contacts of isolator makes the earth switch closed and vice-versa.

Construction:

This is is 3 or 2 phase gang operated double/single break, motor or manually operated off-load isolator. The three/two phases are mounted on three/ two phases are mounted on three/two base channels having 3 or 2 posts of insulators on each phase. For voltage class of 33 KV and above, these insulator posts are either stacked, solid core or poly cone construction as per requirement. Depending upon the creep age distance, the type and no. of insulators in a stack is determined. Phases are connected by phase coupling pipes for gang operation.

Operation:

If electrical / mechanical interlocks are provided, then the operation will be interlinked with the circuit breaker operation. Electrical connections are to be made through auxiliary switch terminals of the isolator as well as the circuit breaker before operating the switch. In the case of electrical interlocking, one switch provided on the outside of the mechanism box, on being pushed releases the interlock provided the CB is OFF, otherwise it will remain in locked condition. Release the electrical interlock push switch after a light movement of operating handle. It will automatically cock again at the end of the travel. With the CB in OFF position, the switch may be in any position but after it is ON, the insulator cannot be operated.

when castle type lock is provided, the key will normally remain cocked with the CB in on position and in OFF position, the key will be released and to be inserted in the coke of the insulator mechanism box and rotate to release the coke. Here also the switch can be kept in any position when the CB is OFF, but when the key is taken away from the mechanism box; the insulator remained coked in that position. The CB cannot be closed without the castle key put in its cock and rotate to trip it there. The insulator can, as an additional safety, be padlocked in either ON or OFF position.

Technical data:-

Rated Voltage : 11/22/33/66/132/220 KV

Rated current : 200/400/600/800/1200/1600/2000 A

Short time current: 13 to 46.67 kA for 1 second

Fixed contact: flat or strip electrolytic copper

Moving blade: copper electrolytic, copper flat/tube.

SF_6 Circuit Breaker:

Introduction:-

The SF_6 circuit breaker makes use of SF_6 gas, which has excellent arc quenching capability & exceptionally high electrical insulating characteristics. In this breaker, the gas flow puffed by puffer cylinder extinguishing the arc. This makes the breaker operation very simple, with low breaking noise. The pneumatic operating mechanism, which is operated by air pressure for opening and spring force for closing, is very simple.

Construction:

Breaker mainly consist of 3- pole units containing puffer type interrupter housing comprising a pneumatic operating mechanism and a compressor and motor, air reservoir and a horizontal rod assembly. Opening operation is carried out by compressed air stored in air reservoir, and closing operation is carried out by closing spring charged during previous opening operation. Each interrupting unit is filled with SF_6 gas and kept at same pressure through the interconnecting copper gas pipe which is also connected to the gas feed port. All the moving contacts of the three interrupting units are interlinked mechanically to the operating mechanism.

Plate ratings:

Rated lightening impulse withstand voltage: 650 KV

Rated short circuit breaking current: 31.5 kA

Rated operating pressure: 15 kg/ cm^2 –g

First pole to clear factor: 1.5

Rated voltage: 145 KV

Rated frequency: 50 Hz

Rated normal current: 3150 A

Rated closing voltage: 110 V DC

Rated opening voltage: 110 V DC

Rated gas pressure: 5 kg/ cm^2 –g (at 20 ^oC)

Rated voltage and frequency for auxiliary circuit: 415 V at 50 Hz

Current transformer:-

Application:

The current transformer (CT) has an electromagnetic system a accommodated in transformer head. Primary current carrying system through the head endows the transformer with high dynamic and thermal stability. The secondary windings are insulated and located inside the head. External insulation is assured by an outdoor porcelain insulator. The insulation system is fully encapsulated and hermitically sealed.

Active component:

The secondary windings are of insulated copper wire uniformly distributed over the circumference of the core. Each layer of winding is perfectly insulated from each other, using good quality insulating material. The ring type cores, the secondary windings are accommodated in a cavity free aluminum alloy casting. The secondary leads are taken out through a condenser bushing and porcelain to the bottom housing. The entire active component in its own housing is dried under vacuum and impregnated with oil.

Transformer head:

The transformer head is made out of special aluminum alloy accommodates the primary winding with the externally accessible primary reconnections and metal bellow made of stainless steel as expansion element for the temperature dependent oil volume changes. The oil level and operating mode can be checked by means of a readable bellow position indicator located at top of the CT and can be easily read at any time. Two lifting lugd are provided in the CT head.

Use:

The line parameters are of very high values and that's why the measurement of these parameters is not possible by simple instruments. So for the measurement of such parameters, we step down then to a lower value and then make the measurement. CT is used for measurement of the line current with out affecting its effect in the line mains.

Bottom housing:

The transformer bottom housing is of special aluminum alloy. The terminal box is fixed to the bottom housing. The rating plate is permanently fix on terminal box cover. The transformer bottom housing also accommodates the group pads, the oil drain screw, lifting holes, and mounting holes. A detachable blind plate is provided for cable lead-in.

Terminals:-

Ground terminal:

The bottom housing of the city is to be grounded through the grounding pads in such a manner that the short circuit current of the installation can be carried through the ground connection.

Secondary terminals;

The measuring instruments, relays etc. are to be connected to the secondary terminals as required. Be sure that the VA values given in the rating plate are adhered to and secondary windings not in use are short-circuited.

Primary connections:-

After the transformer bottom housing has been grounded and the secondary terminals have been connected, the main line may be connected to the primary connection of the CT.

Operation:-

By checking the bellow position indicator, the operating mode of transformer may be ascertained as follows:

The red indicator on the metal bellow must be between the minimum and maximum markings on the transformer head, otherwise malfunctioning is expected.

CURRENT TRANSFORMER

Capacitor Bank And Series Reactor:

General:

The capacitor banks are of 3300 KVAR, 12.65 KV, 3- phase, star-star connected along with neutral CT of ratio 15/1 A to sense the neutral unbalance currents in case of failure of a capacitor unit and 0.00925 H series reactor to reduce the amount of inrush currents due to parallel switching of capacitor bank, 1 no. each/ capacitor bank.

3000 KVAR capacitor bank is made up of 24 no. of 137.5 KVAR, 7.3 KV, 1-phase, 2 bushing type basic capacitor units, 8 units in parallel per phase. An expulsion type fuse rating 50 amperes individually protected each capacitor unit.

Equipments:

The supply consist of:

a) 3300 KVAR, 12.65 KV, 3-phase capacitor bank: 2 nos.

b) 15/1 amperes, 10 VA, Neutral CT : 2 nos.

c) 0.00925 H series reactance: 2 nos.

Tests:

(i) Physical check

For trouble free operation of capacitor bank, it should be ensured that all cable connections leading to the capacitor bank are of proper size. Cable size and capacity of switch should be selected to carry approximately 2.5 times the rated current. This is to take care of inrush currents at the time of switching ‘ON’ the capacitor banks.

(ii) Tests:

(a) Megger test:

Charge the capacitor between terminals with 500 v or 1000 V DC meggar. The meggar first shows short circuit and then slowly charge builds up. This indicates that capacitor unit is electrically OK. If the meggar indication is zero, it means that capacitor unit is internally short circuit and if it is internally open circuit, the indication will be infinity.

Discharge the capacitor by shorting the terminals and repeat the test on other units also.

(b) Installation resistance test:

Meggar value between terminals shorted together and container may be checked with a DC meggar to ensure that there is no earth fault. This value should be more than 50 mega ohms.

(c) Rating:

For high voltage capacitors, capacitor current should be measured by applying a low voltage to its terminals. The measured value can be extrapolated to the rated voltage and output at no load may be calculated. The capacitance meter is available, capacitance of individual unit can be checked directly.

Relay Setting:

The relay setting on CB panel can be made corresponding to the maximum overload and unbalance condition as mentioned below:

a) Over current :130 % max

b) Over voltage: 110 % max

c) Neutral displacement current: corresponding to the neutral unbalance.

d) Time delay between switching OFF and ON: 300sec.

Distribution transformer:-

There are mainly four distribution transformers in WSS, two of them are of rating 4 MVA and remaining 1.6 MVA.

Transformer Fittings And Accessories:-

Standard Fittings:

Standard fittings listed below are normally provided on the transformer for the correct and safe operation of the unit:

a) Rating and terminal marking plate
b) Tap changing arrangement:
   I. Off-circuit tap changing switch
   II. Off-circuit tap changing links
   III. ON-load tap changer

c) Two earthing terminals

d) lifting lugs

e) drain – cum –filter valve

f) silica gel dehydrating breather

g) oil level indicator

h) thermometer pocket

I) conservator with drain plug and filling hole

j) air release plug

k) jacking lugs (above 1600 KVA)

l) filter valve

m) under base unidirectional flat rollers

General Description:

the general description of some of the transformer fittings and accessories is given under:

1. Standard fitting:

a) Rating and terminal marking plate:

The transformer is supplied with rating and terminal marking plate of non-corrosive metal with protective covering on which all information concerning the rating, voltage ratio, weights, oil quantity etc. including the serial no. of the unit is engraved.

b) Tap-changing arrangement:

(i) Off-circuit tap changing switch:

The transformer is normally fitted with an off-circuit tap-changing switch to obtain required tap voltage. It can be hand operated by a switch handle mounted on the tank. Locking device is prevent any unauthorized operation of switch. The switch mechanism is such that it can be locked only when it is bridging two contacts on any particular tapping position and cannot be locked in any intermediate position.

It is important the transformer should be isolated from the live lines, before moving the switch. Operating the switch when transformer is energized, will damage the switch contacts due to severe arcing between the contacts and may damage windings also.

(ii) Off-circuit tap changing links:

Contact bridging links are provided inside the transformer tank, to obtain required tap voltage. Links are required to be unbolted and are fixed in any required position of the tap.

c) Earthing terminals :

Core laminations assembly is connected to core clamping frame, which is in turn connected to the tank by a detachable link. Two earthing terminals are provided on the tank, which should be connected to the earthing system of supporting structure of transformer or the stations.

d) Lifting lugs:

Two/four lifting lugs of adequate capacity are provided on the tank to lift completely assembled transformer filled with oil. All lugsare designed for simultaneously use and should be used simultaneously to lif the transformer. Two/four lifting lugs are provided on core clamps for untaking the core and windings.

e) Valves and drain plug:

(i) Valves:

The transformer is equipped with:

Drain cum filter valve at bottom of tank. Filter valve at top of tank Valve are fitted with plugs/banking plates to stop dirt or moisture entering inside the valve and avoid the contaminated of moisture entering inside the valve and avoid the contamination of the transformer oil.

Type of valve:

Plug type: upto 500 KVA units

Wheel valve with female screw threads: 501ti2000 KVA

Wheel valve with flanges: 2001KVA and above

(ii) Drain plugs:

Drain plug is provided on conservator to drain out oil.

f) Silica gel dehydrating breather:

Silica gel breather is filled with silica gel, which absorbs moisture from the air entering the transformer, thus preventing deterioration of oil and insulation due to moisture condensation. The breather contains oil seal unit at the bottom, which prevents the entry of dust and solid particles in air. The color of silica gel is blue when dry and turns into pink when it has absorbed a certain percentage of moisture by weight. This change in color of gel can be observed through a window on a container.

g) Oil level indicator:

there is a plan oil gauge, which indicates oil level in tank or conservator, windowopening is fitted with grooved Perspex sheet and metal frame to give clear indication of oil level.

h) Thermometer pocket:

this pocket is provided to measure temperature of the oil in tank with mercury in glass type thermometer.

i) Conservator with drain plug and filling hole:

it provides the space for expansion/contraction of oil on account of oil temperature during service. It prevents the oil in the tank from coming in direct contact with the atmosphere and protects from deterioration.

j) Air release plug:

air release plug is normally provided on the tank cover for transformer with conservators. A through cross-hole is provided in the plug which allows air to be escaped without removing the plug fully from the seat.

2. Terminal arrangement:

a) Bare bushings:

(I) draw through bushings(oil flooded type):

Winding lead is soldered to the stem of bushing, which is drawn through the hole in porcelain and is fixed outside the porcelain with leak proof gasket.

(II) Solid bushings(through stem type):

Through stem products out of porcelain on either side is provided with nuts and washers to take winding lead on one side and supply on the other side.

b) Cable sealing boxes:

bushings mounted on cable box flange, are integral part of cable box shell, protrude inside the shell to receive supply cable.

c) Bus Duct:

bushings mounted on the tank wall are covered with a small protective metal housing with a flange suitable to take consumer's bus duct. Flexible copper links should be provided to connect bushings to customer's bus.

d) Disconnecting Chember:

This arrangement is provided to disconnect the transformer from the cable box. It is provided for cable box with PILC cables, which facilates disconnection of cable box from transformer without lowering the oil in the tank. Disconnecting links are provided for disconnecting bushings on transformer from the bushing on cable box.

e) CT terminals

Ct secondary leads are brought out to the CT terminal boxes at different places. These boxes are supplied with detachable undrilled gland mounting plate.

f) Bare connections:

in case of overhead lines, the bare conducters are terminated to the transformer bushings.

g) gas and oil actuated (buchholz) relay:

In the event of fault in oil filled transformer, gas is generated due to which Buchholz relay gives warning of developing fault. Buchholz relay is provided with two elements, one for minor faults (gives alarm) and other for major faults (tripping). The alarm elements

operate after a specific volume gets accumulated in the relay. Examples of incipient faults, which generate gas in oil are ;

1. Failure of core bolt insulation
2. Shortage lamination to core clamp
3. Bed electrical contacts or connections
4. Excessive hot spots in winding

The alarm element will also operate in the event of oil leakage. The trip elements operate due to sudden oil surge in event of more serious fault such as:

1. Earth fault insulation failure from winding to earth
2. Winding short circuit inter-turn, inter- layer, inter- coil
3. Short circuit between phases
4. Puncture of bushings

During the operation of transformer if there is an alarm, the transformer should be isolated from lines, and possible reasons should be checked.

Ratings of distribution transformer:

1.) 4 MVA transformer:

KVA	400
Volts: HV LV	 11000 3450
Amperes HV LV	 209.9 669.4
Phase HV LV	 3 3
Type of cooling	ONAN
Frequency	50 HZ
Connection symbol	dYN 11
Core and winding	4810 kg
Weight of oil	2290 kg
Total weight	10520 kg
Oil	2615 ltrs
Guaranteed max. temperature rise in oil	40 deg. C over and ambient temperature of 45 deg. C

2.) **1.6 MVA transformer**:

KVA	1600
Volts: HV LV	 11000 433
Amperes HV LV	 84.9 2133.4
Phase HV LV	 3 3
Type of cooling	ONAN
Frequency	50 HZ
Connection symbol	dYN 11
Core and winding	2230 kg
Weight of oil	1090 kg
Total weight	5160 kg
Oil	1250 ltrs
Guaranteed max. temperature rise in oil	40 deg. C by winding resistance over and ambient temperature of 50 deg. C

Diesel Generating Set:

In CLZS, there are some furnaces and lighting loads, which are always on load. These furnaces contain molten metal and if supply is cut off from these for some time then the metal will get solidify thereby damaging the inner surface of the furnace. Therefore, to avoid the hazards that can occur in event of power failure, four diesel generating sets, abbreviated as D.G. set, are provided in WSS. These are named so, because diesel was used as fuel in it. but nowadays, owing to the high rates and non-availability of diesel, L.D.O. is being used as fuel in the D.G. set.

Principle:

The basic principle used in the DG set is driving a four-stroke engine utilizing the combustion of fuel and delivering the mechanical power. This mechanical power is converted to rotating power. This rotating power is then delivered to an alternator-generator assembly. The alternator is a synchronous generator and its field is excited with the help of a DC generator whose rotor is on the same shaft on which the rotor of alternator is attached. Actually, when the rotating power is delivered to the alternator the rotors of both the generators, being on the same shaft rotates simultaneously and generates electricity, thus, by controlling the field of the DC exciter, we vary the output. The output of the alternator is 11KV.

General description:

AC Generator:

Single Machine:

Adjustment of the field regulator of a generator, running by itself varies the voltage; the current and power factor being solely dependent upon the connected load. An A.V.R.(automatic voltage regulator) is provided with a voltage setting resistor, by means of which the controlled voltage may be adjusted. Adjustment of the prime mover governor setting varies the speed and hence the frequency. Once set the governor allows a slight drop in speed is the load increases.

Parallel Operation:

When a new set is ordered to run in parallel with other plant, its inertia is selected not only to confirm with the limits set for cyclic irregularities, but also to avoid resonance with any known combination of generators, thus minimizing the possibility of hunting.

When only 2 or 3 machine are running in parallel, increasing the excitation of one machine tends to raise the bus bar voltage and increase the lagging KVAR supplied by that machine, Increasing the speed setting of the governor tends to increase the bus bar frequency and to increase the KW load on the machine while reducing that on the others. Hence, to vary the bus bar voltage or frequency whilst preserving the balance of KVA or KW between the machines, simultaneous adjustment of governor settings of all machines must be made.

When a generator is to run in parallel with a large number of other sets or with a large system such as the Grid, the bus bars may be regarded as 'infinite', in such a case, us individual machine makes on appreciable difference to the voltage or frequency of the bus bars increasing the excitation of a generator only increases the lagging KVAR supplied by it.

Brushless Generator Excitation:

Exciter and rectifier assembly:

The essential feature of a brushless generator is of the revolving type and the exciter is small three phase rotating armature generator directly coupled to the main generator.

The rectifier assembly comprises two sets of silicon diodes, six fuses and two heat-sinks. one set of diodes with a positive base are mounted on one heat sink and the other set of diodes with a negative base are mounted on the other heat sink.

Quadrature Current Compensation:

The simplest method of ensuring stable control of the reactive load sharing is to arrange the excitation system of each generator so that its voltage drops slightly proportional to its reactive load.

The normal method of achieving this on automatically regulated generator is to inject in series with the sensing circuit of the voltage regulator, a voltage proportional to the load current. The phase angle of the injected voltage should be such that when a generator supplying a lagging reactive load, the injected voltage is approximately in phase with the voltage supply to the sensing circuit. This method of compensations known as quadrature current compensation (QCC) and has the advantage that no auxiliary inter-connections and required between generators. The disadvantage of this method that the bus bar voltage will vary slightly according to the external reactive load.

Single Running :

The voltage regulator is a closed loop control system in which a detector circuit compares the generator voltage with a reference voltage. The difference is fed into an amplifier whose output controls the exciter field current so as to attempt to match the generator voltage with the reference voltage. The inherent discrepancy which is necessary to vary the excitation over is full range is known as the voltage regulation and depends on the stability of the reference voltage, the gain of the amplifier and the magnitude of the load change.

Parallel Operation:

If two generators controlled by AVR s were to be connected in parallel without any form of compensation, there would be a tendency for heavy reactive current to circulate between the two circuits.

If the voltage of one generator say A, is slightly higher than that of the second say B, then, when synchronized, the busber voltage take up a value between the two. The voltage sensed by the regulator on generator A will therefore be lover then its reference voltage with the result that the excitation will be increased will be attempt to increase the voltage. At the same time, the converse applies to generator B with the net result that the generated emf of generator A increases and that of generator B decreases.

The difference in the generated emfs produces a reactive circulating current, which is limited only by the combined internal impedance of the generators. Since the busber voltage is unaffected the excitation will increase to a high value on generator A and decrease to a low value on generator B resulting in a heavy circulating current, which to generator a is a lagging reactive load and to generator B is a leading reactive load.

If the excitation system of the two generators ere now compensated by the QCC method, generator A would supply only sufficient lagging current to ensure that the bus-bar voltage plus the injected voltage equaled its reference voltage. Generator B would supply only sufficient leading current to ensure that the busbar voltage minus the injected voltage equaled its reference voltage.

Ratings of DG sets:

OUTPUT DC Amperes	423
OUTPUT DC Volts	92
RPM	750
FIELD Amps.	8.5
FIELD Volts	81.6
Ambient temperature	45 deg. C
Altitude	1000 m
Armature insulation	Class F

Ratings of synchronus generator:

OUTPUT	6250 KVA
RPM	750
Volts	11 KV
Amps.	328
Power factor	0.8
Phase/ Freq.	3/50 Hz
Connection	Star
Excitation Volts.	92
Excitation Ampere	425
Type	Synchronous generator
Rating	Continous
Ambient temperature	45 deg. C
Altitude	1000 m
Coolant	Air
Rotor & stator insulation	Class F
Rotation	Anticlockwise.

Ratings of engine used in DG set:

Engine type	VS37G-HBC
Bore	325 mm
Stroke	370 mm
No. of cylinders	16
RPM	16
BHP	6930

Relays used in DG set:

The following relays are used in DG set:

1. Over voltage relay
2. Under voltage relay
3. General differential relay
4. Definite time earth fault relay
5. Non- directional over current relay with under voltage control
6. Overload alarm relay
7. Load shedding relay
8. Auxiliary relay
9. Field failure relay
10. Reverse power relay
11. Negative phase sequence relay
12. Under frequency relay.

Power supply from DG set:

The main use of DG set is to supply electricity continuously irrespective of the power cutoff from AVVNL. There are total four DG set, each of capacity 5 MW, the total capacity is thus 20 MW. Out of these four DG sets, one DG set is always ON and gives continous power supply. This DG set feeds power to some furnaces and also some lightening load. The power supply from DG set is synchronized with that form AVVNL. The remaining DG sets are not in operation generally but they are ready to start in case of power failure. The power generation from diesel oil is somewhat costlier than traditional methods of power generation such as hydro-electricity and thermal power, but since large amount of cooling and water needed in these methods, hence power generation from diesel oil suits best to the conditions of CLZS.

LEAD CIRCUIT

Lead Refinery Plant (LRP) *:-*

Process :

Lead bullion from the furnace is transferred to lead refinery in a ladle of 10 T capacity. The metal is refined by removing the impurities in form of drosses by sequential kettle in batches. Refining of lead bullion is based on MM technology.

The furnace bullion, which contains approx. 10% of copper is first decopperised and the copper bearing drosses are sent to copper recovery plant for recovery of copper. The decopperised bullion is cast into lead anodes. The lead starting sheets, which form cathodes, are directly cast from the molten lead of deposited lead cathodes in water cooled drum. The lead anodes and the starting sheets are put into a tank cells filled with hydrofluosilic acid (H_2SiF_6) and are electrolyzed. Deposit cathodes at regular intervals are pulled up, re-melted and cast into ingots for sale. Slimes will be scrapped from anodes at regular intervals and processed for recovery of noble metals .

Electrical supply in LRP:

There are mainly three transformers situated in the LRP power system, all having the ratings as 11000/440 Volts. The supply voltage in PCC and that in MCC is 440 Volts. The MCC & PCC of silver refinery plant are also located in this plant. Thus supply for silver refinery also goes from PCC at LRP. This comes out of the fact that silver refinery plant is one of the feeders coming out of LRP. In PCC of LRP, there are three incomers coming from different panels, namely 52,13, 49. All the three incomers are connected through two bus coupler. Along with these, an electric heat tracing panel is there. Two chargers I & II are in front of it and one DCDB common LRP substation is located in between. And in the same line, there are two incomers, shown by ACDB-I & ACDB-II. These incomers are coming from the panels 29 B and 33 B respectively. In the PCC of LRP, there are 37 compartments in which 33 feeders are present.

(1) Bag house Fan-I&II

A. Motor protection Relay

a) Instantaneous I

b) I_a

c) Thermal

d) I(t)

e) I_b

B. Auxiliary Relay Type VAA

a) 74 A

b) 74 B

c) Control

i. Breaker control

ii. Tripping Relay-86 A

iii. Auxiliary relay type VAA

(2) LPG

A. Over current relay- CDG

I. R-51 RX

II. Y-51 YX

III. B-51 BX

B. Earth Fault Relay

I. 51 N

C. Auxiliary Relay-VAA

I. 86B

II. 74A

III. 74B

(3) Precious Metal Gas

A. Over current relay- CDG

I. R-51 RX

II. Y-51 YX

III. B-51 BX

B. Earth Fault Relay

I. 51 N

(4) LRP MCC

(5) Bus Coupler I&II

Production of Refined Lead:

There are mainly 8 kettles in lead refinery represented by M_1 to M_8. First of all, arsenic is removed in the form of sodium arsenate (yellow power) by adding NaOH. Thereafter, it is taken in M_2 and zinc is added at 460 ^oC. this gives a black material of Ag, which is removed. The remaining material is sent to M_3 and cooling process is done at 300 ^oC, so that the zinc used in silver removal is removed as zinc vapours and its dross is formed. In M_5, in order to obtain Sb in dross form, we add sodium nitrate and Caustic soda so that Sb gets separated in dross form. The remaining portion is sent to M_6 and more solution of sodium nitrate is added in it to further extract to casting by casting machine.

There are two conveyor in casting machine having capacity of 18 tons/hour, these are termed as casting conveyor and feed conveyor. In casting conveyor, these are slots, in which three slots, lead is filled. At this stage, the lead is in liquid form, which is then cooled by passing cold water under it. This cause the lead to form solid ingot.

Main uses of lead:

- Die casting
- Power cable
- Battery purpose

CONCLUSION

It was a great experience to be there in CSZL for my practical training. Like every good thing, it had come to an end so it did. Though I am feeling sad at this point of time while leaving from here but I do have a great memories of time spent here.

During last 30 days, I certainly learnt a lot about every aspect of this field, right from the working environment to the technical details of various equipments and process. Relating to my branch, I certainly learnt a lot about the induction motors and electrical accessories used in WSS, especially.

The thing are numerous, while words are only few. To conclude, I would rather say that even after my full try, I could pick pu only a mouthful knowledge out of sea. The time was really very less while there was a lot to learn.

Well, that's how the life goes on. I hope I would have another chance to visit and learn more in it.