Inspection Manual for Heat Exchangers

IndianOil

INDEX

Scope, Name
&
Functions of Heat Exchangers

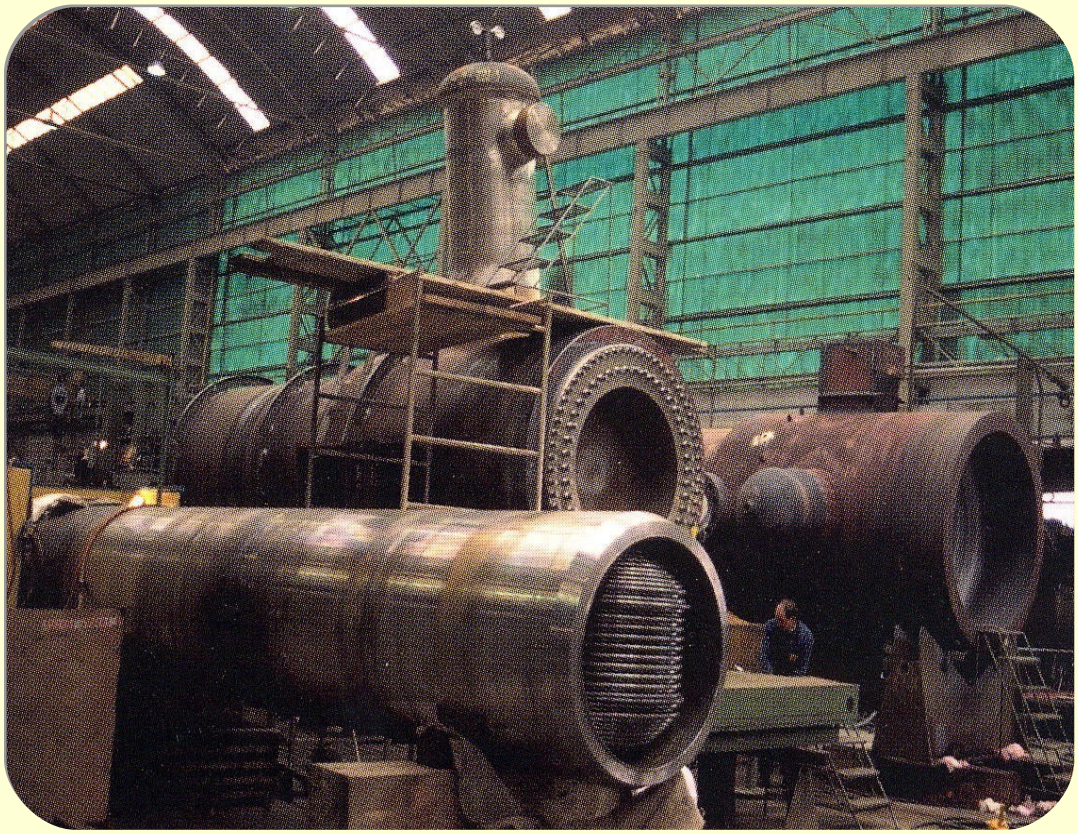

1.0 SCOPE

This manual covers the basic guidelines and minimum requirements for periodic inspection of heat exchangers used in petroleum refinery. Locations to be inspected, inspection tools, frequency of inspection & testing, locations prone to deterioration and causes, corrosion mitigation, inspection and testing procedures have been specified in the manual.

Documentation of observations & history of heat exchangers, inspection checklist and recommended practices have also been included.

2.0 NAME AND FUNCTIONS OF HEAT EXCHANGERS

Heat exchanging equipment is used for heating or cooling a fluid. Individual heat transfer equipment is named as per its function.

Cooler
A cooler cools the process fluid, using water or air, with no change of phase.

Chiller
A chiller uses a refrigerant to cool process fluid to a temperature below that obtainable with water.

Condenser
A condenser condenses a vapour or mixture of vapours using water or air.

Exchanger
An exchanger performs two functions in that it heats a cold process fluid by recovering heat from a hot fluid, which it cools. None of the transferred heat is lost.

Steam Heater
A steam heater uses steam to heat either water or process fluid.

Steam Generator/ Waste Heat Boiler
A steam generator produces steam from water using hot process fluid (that requires cooling) or hot gases produced in chemical reaction.

Re-Boiler
A re-boiler uses steam or any hot fluid to heat process fluid (hydrocarbon) for distillation column.

Types of Heat Exchanger

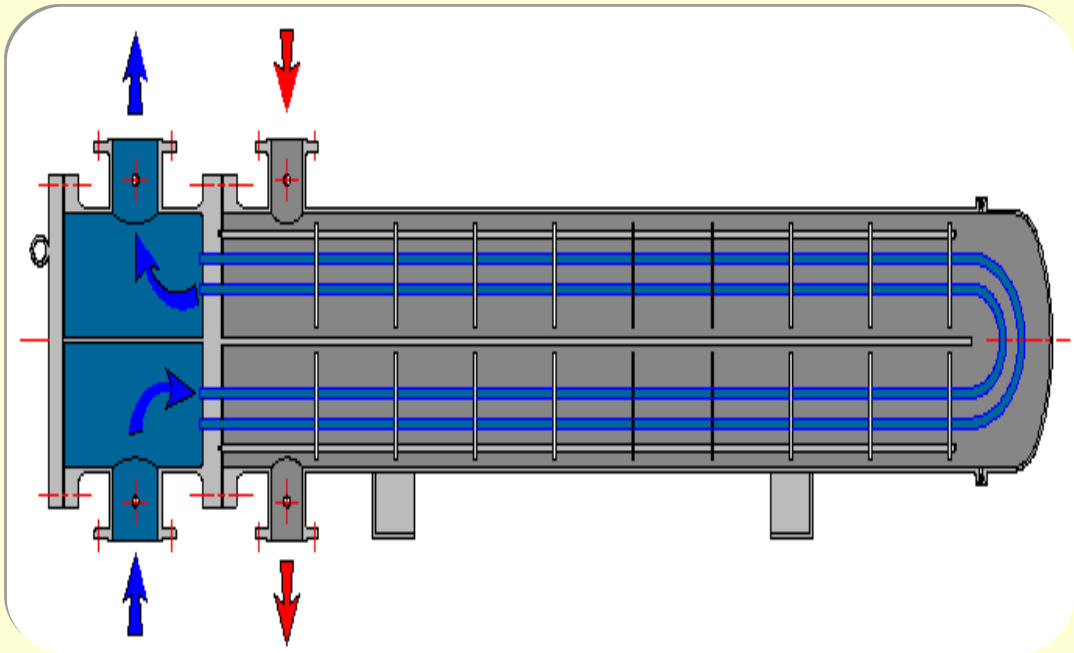

CFU Type Exchanger

3.0 TYPES OF HEAT EXCHANGERS

Following are the various type of heat exchanger used in Refineries.

3.1 BOX COOLER

This simplest heat transfer equipment is a coil of steel pipe submerged in a tank of water. The liquid to be cooled flows inside the pipe. The coil in the water tank is commonly called box cooler. These are no longer in use due to low thermal efficiency.

1.2 TUBE-IN-TUBE EXCHANGER

The tube-in-tube unit is completely enclosed and allows the heat transfer element, the pipe, to be surrounded by a faster moving coolant. The double pipe provides counter flow, that is, the hot and cold fluids flow in opposite directions, which is a very desirable feature for efficient heat transfer. Tube-in-tube exchangers are compact and can easily be stacked for connection in parallel or series.

1.3 AIR FIN FAN COOLER

Air-cooled exchangers are usually designed and fabricated as per API 661. They are exclusively constructed with tubes mostly in horizontal position stacked in layers and their ends rolled and/or welded to tube sheets enclosed by header compartments. Air is circulated by a fan placed either above or at the bottom of the steel framework in which the entire assembly is fixed. These coolers are used for condensing vapour or cooling fluids by blowing air and are installed where water is scarce or from economic viability upto certain optimized temperature.

Air Fin Fan Cooler

1.4 SHELL AND TUBE EXCHANGER

Although the type of exchangers mentioned above are in use but the most common heat exchangers are shell and tube type exchangers. The various Shell and Tube type of Heat Exchangers, as classified in TEMA is enclosed as Annexure-X. In general, a shell and tube exchanger consists of a shell, a tube bundle, a channel head, floating head cover and shell cover. They are broadly sub classified as follows.

Straight-Tube Design

This design is suitable in heavy fouling fluids service. The head assemblies can be removed to facilitate cleaning of tubes mechanically. The ability to handle large temperature differences between the fluids may be limited and depends upon the tube sheet configuration i.e. fixed or floating.

TABLE N-2

1. Stationary Head-Channel
2. Stationary Head-Bonnet
3. Stationary Head Flange-Channel or Bonnet
4. Channel Cover
5. Stationary Head Nozzle
6. Stationary Tubesheet
7. Tubes
8. Shell
9. Shell Cover
10. Shell Flange-Stationary Head End
11. Shell Flange-Rear Head End
12. Shell Nozzle
13. Shell Cover Flange
14. Expansion Joint
15. Floating Tubesheet
16. Floating Head Cover
17. Floating Head Cover Flange
18. Floating Head Backing Device
19. Split Shear Ring
20. Slip-on Backing Flange
21. Floating Head Cover-External
22. Floating Tubesheet Skirt
23. Packing Box
24. Packing
25. Packing Gland
26. Lantern Ring
27. Tierods and Spacers
28. Transverse Baffles or Support Plates
29. Impingement Plate
30. Longitudinal Baffle
31. Pass Partition
32. Vent Connection
33. Drain Connection
34. Instrument Connection
35. Support Saddle
36. Lifting Lug
37. Support Bracket
38. Weir
39. Liquid Level Connection
40. Floating Head Support

FIGURE N-2

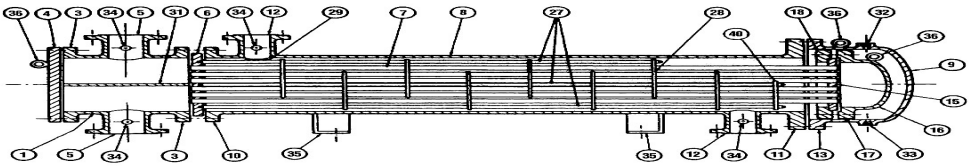

Shell & tube exchanger (straight tube design & floating head)

Nomenclature of heat exchanger components			
1	Stationary Head-Channel	16	Floating Head Cover
3	Stationary Head Flange-Channel or Bonnet	17	Floating Head Cover Flange
4	Channel Cover	18	Floating Head Backing Device
5	Stationary Head Nozzle	27	Tierods and Spacers
6	Stationary Tube sheet	28	Transverse Beffles or Support Plates
7	Tubes	29	Impingement Plate
8	Shell	31	Pass Partition
9	Shell Cover	32	Vent Connection
10	Shell Flange-Stationary Head End	33	Drain Connection
11	Shell Flange-Rear Head End	34	Instrument Connection
12	Shell Nozzle	35	Support Saddle
13	Shell Cover Flange	36	Lifting Lug
15	Floating Tube-sheet	40	Floating Head Support

U-Tube Design

The U-tube design consists of straight length tubes bent into a U-shape. The bundle is fitted with tube supports or flow baffles, depending upon the fluid outside the tubes. The tube assembly is placed in a shell to contain the fluid on the outside of the tube bundle. A head assembly is bolted to the shell to direct the fluid into the tube bundle. The head assembly contains one or more partitions for controlling fluid flow velocity and therefore, the heat transfer coefficient and pressure drop. The U-tube construction allows for large temperature differences between the tube-side and shell-side fluids with the U-tubes expanding or contracting independently of the shell assembly. The disadvantage of the U-tube exchanger is that tubes are difficult to clean internally and also replacement of leaky tubes in the inner rows involves unnecessary cutting of good tubes in the outer rows. The U-tube bundle exchangers usually have a welded shell cover.

Following fig. Illustrates the shell and “U” tube type heat exchangers commonly used in refineries.

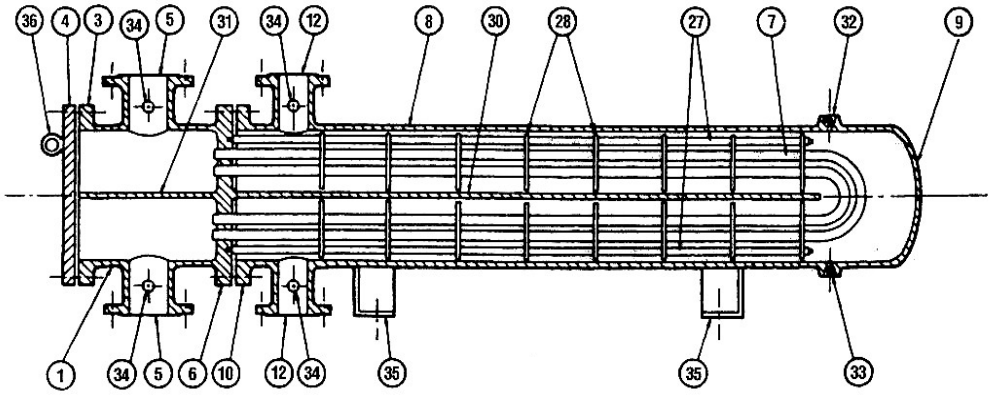

Shell & tube exchanger with ‘U’ tube design

Nomenclature of heat exchanger components			
1	Stationary Head-Channel	27	Tie rods and Spacers
3	Stationary Head Flange-Channel or Bonnet	28	Transverse Beffles or Support Plates
4	Channel Cover	30	Longitudinal Baffle
5	Stationary Head Nozzle	31	Pass Partition
6	Stationary Tube sheet	32	Vent Connection
7	U-Tubes	33	Drain Connection
8	Shell	34	Instrument Connection
9	Shell Cover	35	Support Saddle
10	Shell Flange-Stationary Head End	36	Lifting Lug
12	Shell Nozzle		

3.4.1 Floating Head Exchangers

The exchanger consists of a cylindrical shell flanged at both ends, a tube bundle with a tube sheet at each end, a channel with cover, a floating head cover and a shell cover. The diameter of floating tube sheet is smaller than the shell diameter so that tube bundle can be inserted into the shell. The diameter of the stationary tube sheet is large enough to bear on the gasket surface of one shell flange. The channel is bolted onto this shell flange so as to hold the stationary tube sheet in position. Similarly, the floating head cover is bolted onto the floating tube sheet. The shell cover is thereafter bolted in its place. Suitable partition arrangements in the channel and the floating head cover can provide several tube side passes. The desired fluid flow pattern through the shell is directed by baffles. The floating tube sheet is free to move in the shell. This type of construction permits free expansion and contraction with changes in temperature. This type of exchanger is most commonly used.

3.4.2 Fixed Tube Sheet Exchanger

It consists of two tube sheets welded to the shell with the tubes rolled into the tube sheets, with channel head on either side. Since the tube bundle cannot be pulled out, this type of exchanger is suitable for clean fluid services where there is little possibility of fouling on the outside of the tubes, otherwise chemical cleaning will need to be done. Also, temperature conditions should be such that the stresses due to differential thermal expansion between shell and the tube does not overstress shell or tube, otherwise expansion bellows will need to be provided on shell to take care of this differential thermal expansion. The typical fig. of fixed tube exchanger is illustrated below.

FIGURE N-2 (continued)

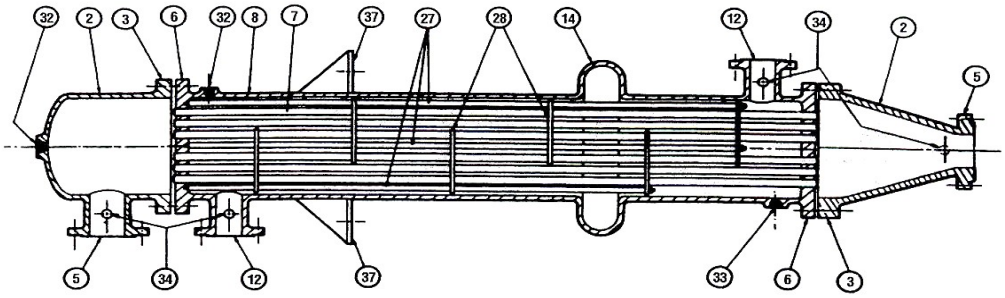

Shell & tube exchanger with fixed tube sheet design

Nomenclature of Fixed Tube Sheet Exchanger Components			
2	Stationary Head Bonnet	14	Expansion joints
3	Stationary Head Flange-Channel or Bonnet	27	Tierods and Spacers
5	Stationary Head Nozzle	28	Transverse Beffles or Support Plates
6	Stationary Tube sheet	32	Vent Connection
7	Tubes	33	Drain Connection
8	Shell	34	Instrument Connection
12	Shell Nozzle	37	Support bracket

3.4.3 Re-boiler / Kettle Shell

The primary use of this exchanger is boiling the fluid for distillation. The kettle shell is used in the re-boilers, or chillers. The fluid to be heated is in the shell and the heating medium, generally steam or process fluid, is in the tubes. Such re-boilers are called process re-boiler. The shell of the kettle type re-boiler has large vapour space over the tube bundle.

A kettle type re-boiler has several advantages over standard heat exchangers in similar service. It has a lower pressure drop and can handle widely fluctuating load. The same type of construction is used in some chillers. For this service a volatile cooling medium such as

propane is in shell and fluid to be cooled in tubes. The latent heat of vaporization is absorbed from the cooled medium. The bundle may be “U’ tube type or straight tube with floating head. A typical kettle type reboiler is illustrated below.

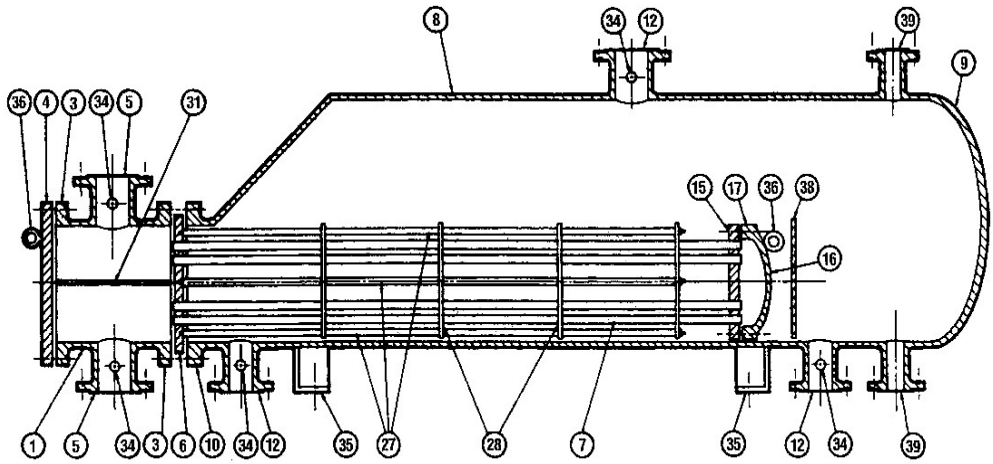

Kettle shell type exchanger with floating head design

Nomenclature of heat exchanger components			
1	Stationary Head-Channel	16	Floating Head Cover
3	Stationary Head Flange-Channel or Bonnet	17	Floating Heat Cover Flange
4	Channel Cover	27	Tierods and Spacers
5	Stationary Head Nozzle	28	Transverse Baffles or Support Plates
6	Stationary Tube sheet	31	Pass Partition
7	Tubes	34	Instrument Connection
8	Shell	35	Support Saddle
9	Shell Cover	36	Lifting Lug
10	Shell Flange-Stationary Head End	38	Weir
12	Shell Nozzle	39	Liquid Level Connection
15	Floating Tube sheet		

3.4.4 Waste Heat Boiler

Heat exchangers, when used for steam generation is called unfired boiler or waste heat boiler and comes under the purview of Indian Boiler Regulation (IBR). Steam is generated in shell side with the help of process fluid of tube side. On the shell safety devices are provided as per IBR. Safety valves are mounted on the shell. These waste heat boilers are to be offered to IBR authority for statutory inspection and certification once in two years.

3.4.5 Breech Lock Exchanger

Breech lock heat exchanger have an integral shell and channel section, in contrast to conventional shell and channel of flange type heat exchanger thus eliminating the need for flanges. The tube sheet is

fixed onto the annular shoulder between the shell and channel and breech lock type sealing mechanism is used in the channel cover.

Over View of Breech Lock Exchanger

Breech–lock closure is obtained by mean of a special threaded ring screwed into the channel, thus avoiding over sized bolting requirement with conventional design. In-service, re-tightening of the gasket between tube sheet and shell can be performed. The set bolts for the sealing mechanism being of a small diameter are easy to tighten. Even if the torque varies slightly, the gasket retainer uniformly redistributes the tightening force on the gasket. This design feature provides for an ideal sealing mechanism, which ensures dependable tightening characteristics under high temperature, high-pressure service. Furthermore, because of the small diameter set bolts, disassembly and reassembly is facilitated, a great advantage from maintenance point of view. Breech lock exchangers are of two types:

i) H-H type (shell side and tube side are under high pressure)

ii) H-L type (tube side at high pressure)

Advantages of Breech Lock Exchangers

- Re-tighten the internal tube sheet-to-shell gasket from the outside during operation.
- The hydrostatic pressure load on the channel cover is absorbed by the channel forging via a special threaded ring construction, not by heavy bolting.
- The bolts in the channel cover are only sized for gasket compression loading. This results in relatively small size bolts, that can be tightened using normal wrenches, thus eliminating the need

for hydraulic bolt tensioning devices that are required on conventional bolted flanged exchangers.

- The channel cover is relatively thin (no edge bending due to bolting).
- The number of flanged joints is reduced to a minimum due to the integral construction of pressure parts.
- The internal surface of the channel is stainless steel weld overlaid, the risk of overlay disbonding or other stress induced cracking is minimized due to the elimination of internal attachment welds, threaded holes in the pressure forgings and tension forces on the weld overlay. The channel cover does not need to be cladded due to the use of a stainless steel diaphragm.

3.4.1 Welded Plate Type Heat Exchanger

The welded plate type heat exchanger is comprised of a heat transfer bundle and pressure vessel. All the heat transfer takes place inside the

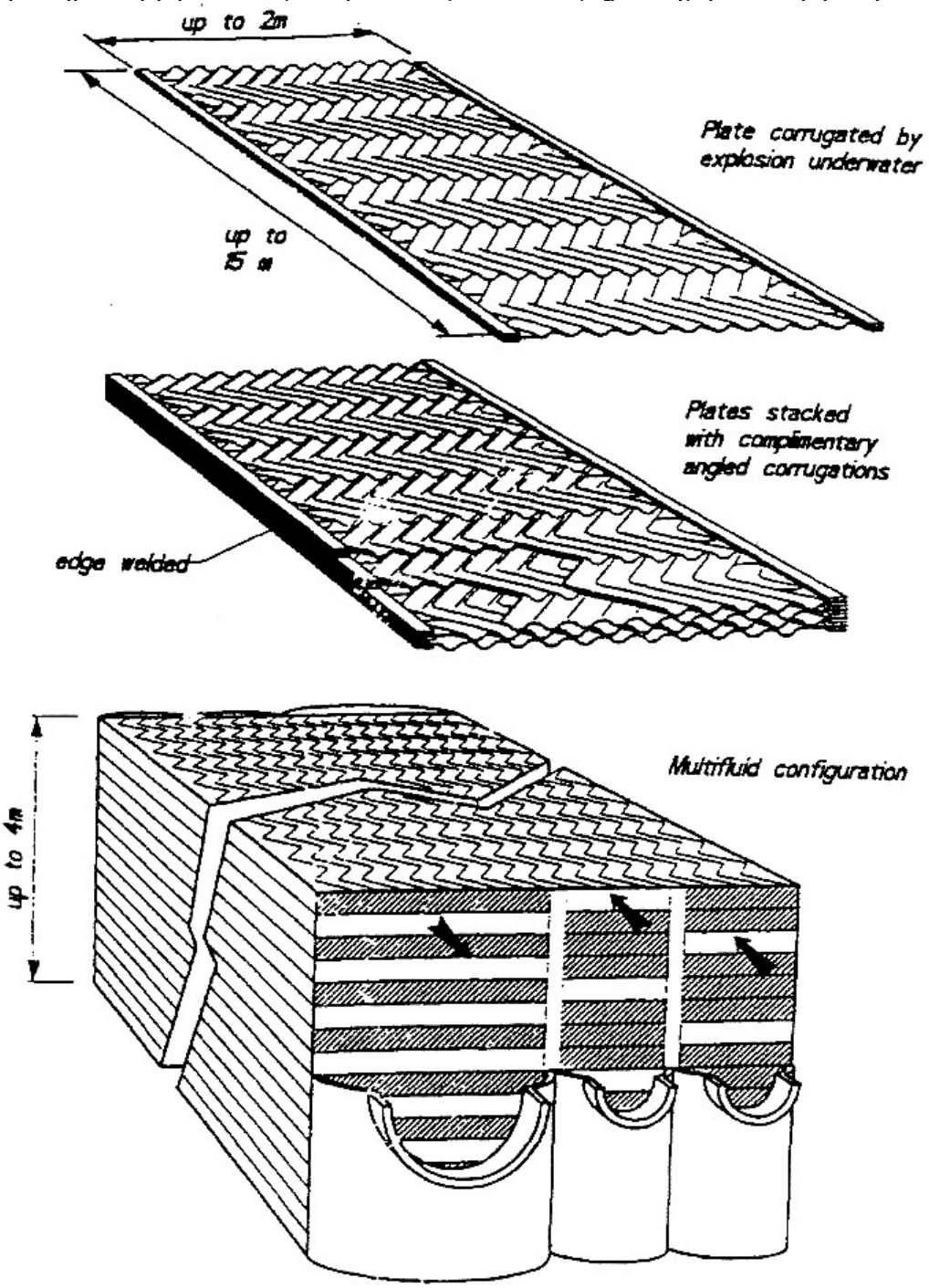

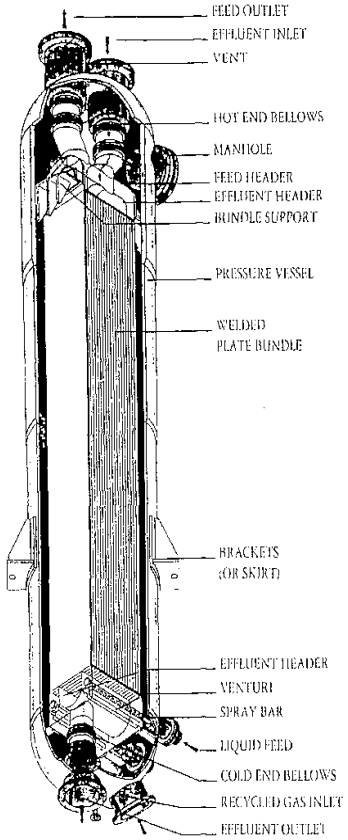

TYPICAL GENERAL ARRANGEMENT

Figure 1

Feed Outlet
Effluent Inlet
Vent

Hot End Bellows

Manhole
Feed Header
Effluent Header
Bundle Support

Pressure Vessel

Welded Plate Bundle

Brackets (Or Skirt)

Effluent Header
Venturi
Spray Bar

Liquid Feed

Cold End Bellows

Recycled Gas Inlet

Effluent Outlet

erates in counter flow. Hot
eat exchanger at the top and
feed such as effluent enters
/s downward as it is being
d liquid feed enters the heat
being heated. The cold feed
gas and the liquid feed. The
of the vessel and then flows
specially designed inlet. The
undle through spray bars to
. Liquid feed and recycle gas
he heat transfer bundle.

Typical General Arrangement

The design is such that all required maintenance is performed on site, on the foundation and primary access manhole is provided near the top of the pressure vessel. This manhole is large enough for insertion of replacement parts for hot-end expansion bellows, if ever necessary. A secondary access in the bottom of the exchanger is provided, either through the recycle gas connection or through a second manhole.

3.4.2 Helix-Type Heat Exchanger

Helix-changers are a helically baffled shell and tube heat exchanger. Each baffle occupies about one quadrant of the cross section and has a certain inclination with the centerline of the exchanger. Successive baffles are arranged in such a way as to create continuous helical and near plug-flow condition on the shell side.

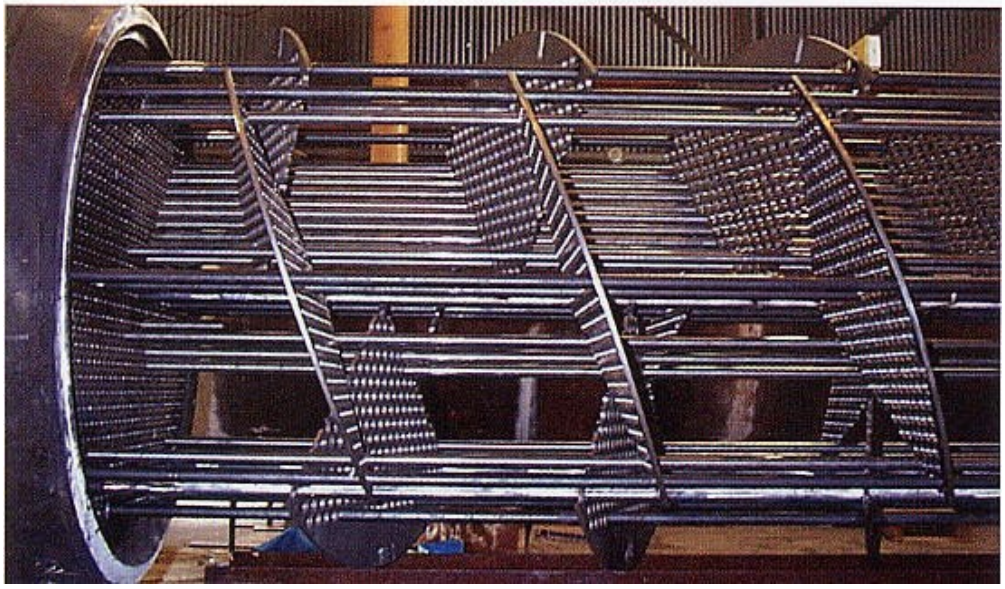

Helix Heat Exchanger Tube Bundle in Fabrication

Compared to the conventional perpendicular segment-ally baffled shell and tube heat exchangers, Helix-changers offer the following potential advantages:

- Increased heat transfer rates/ pressure drop ratio.
- Optional reduced investment costs.
- Reduced fouling.
- Reduced vibration hazards.
- Reduced maintenance costs.
- Long run length

Helix-changers are best suited for services in which the shell side heat transfer coefficient plays a determining role and/or shell side pressure drop or fouling reduction has an incentive. Shell side media may range from hydrogen-rich gas to water or viscous fluids with high fouling tendencies, in single or two-phase flow.

Helix-changers can be designed with TEMA E, J or special multi-pass shells with multi-pass tube bundles. Applications are in the Refinery, Petrochemical Industry and Power Industry as well as in the Offshore, paper and pulp and food business sectors. Some examples are:

- oil-oil heat exchangers.
- Gas-gas heat exchangers.
- Water-water coolers.
- Compressor after-coolers.
- Gas-liquid heat exchanger.
- Reactor feed-effluent exchangers.
- Condensers.

- Re-boilers.

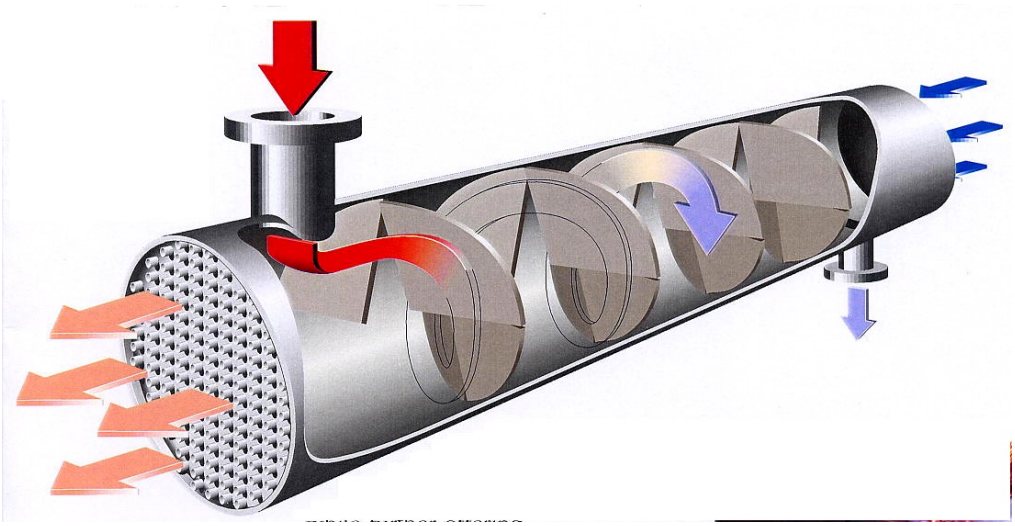

Fluid Flow Orientation in Helix Exchanger

Helix-changer can be attractive for new projects as well as revamps of existing units. New designs will be optimized with respect to possible reduced area or reduced energy cost, reduced pressure drop and related investment. For revamps existing shells can be used with only tube bundle replacement, yielding increased capacity and/or thermal efficiency while further offering reduced maintenance (frequency) and in some cases less downtime.

Corrosion & Deterioration in Heat Exchanger

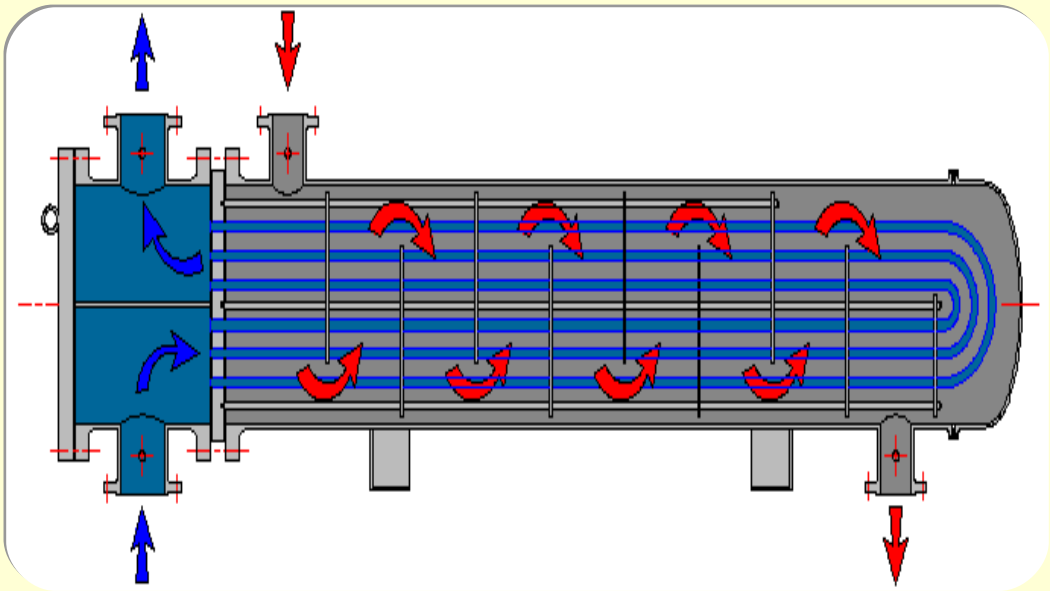

AEU Type Exchanger

4.0 CORROSION AND DETERIORATION IN HEAT EXCHANGERS

Deterioration may be expected on all the surfaces of heat exchanger in contact with hydrocarbon, chemical, sea water, fresh water, steam and condensate. The form of attack may be electrochemical, mechanical or combination of both. The attack may be further influenced by certain accelerating factors such as temperature, stress, fatigue, high velocity of flow and impingement.

4.1 SHELL AND SHELL COVER

- Carbon steel shells are prone to internal corrosion and pitting when hydrocarbon streams contain compounds of sulphur such as hydrogen sulphide or mercaptans. At temperatures above 270^0 C, Hydrogen sulphide reacts with carbon steel and forms Iron Sulphide scales. This usually results in a fairly uniform loss of metal. This type of corrosion is more predominant in preheat exchangers.

- Internal corrosion can also occur due to low temperature hydrochloric acid and or hydrogen sulphide corrosion in presence of moisture. Overhead condenser shells in crude distillation, vacuum, visbreaker and FCC units are prone to this type of attack.

- A combination of wet hydrogen sulphide and hydrochloric acid (that form due to hydrolysis of chlorides in crude during distillation) aggravates the internal corrosion of overhead condenser shells. It will be most pronounced in the bottom part of the shell and lower nozzles. This type of corrosion is fairly uniform or in the forms of a groove following the line of flow of the condensate.

- Reboiler shells are prone to internal pitting or grooving due to steam condensate corrosion.

- Overhead condensers, coolers and exchangers in sour gas, MEA / DEA service are prone to shell side cracking due to stress corrosion cracking phenomenon at the weld joints if they are not properly stress relieved.

- Erosion / corrosion will take place around outlet nozzles of cooler shells due to solid particles like catalyst present in streams.

- Grooving and thinning of shell may take place in coolers or condensers at the baffle resting locations due to galvanic corrosion.

- Pitting type corrosion will take place in carbon steel heat exchangers shell in high temperature MEA / DEA or phenol service.

- External corrosion of shells may result due to water seepage in the thermal insulation having high chloride concentration.

4.2 TUBES

- Copper zinc alloy tubes like Admiralty Brass or Aluminium Brass tubes are susceptible to stress corrosion cracking due to presence of aquous Ammonia in overhead condensers.

- Cupro-Nickel alloy tubes in overhead condensers corrode when they are exposed to hydrocarbon vapours containing H_2S. Sulphide scales of nickel and Copper are formed in alkaline medium.

- Erosion of tube ends are common in exchangers and is more pronounced where hydrocarbon streams contain solid particles such as catalyst. This phenomenon can be seen in exchangers in FCC unit.

- Grooving around tubes may take place at baffle locations due to vibrations or crevice corrosion.

- Erosion corrosion occurs when the erosion effects of the coolant removes the protective film, thus exposing a fresh surface to corrosion. This type of attack occurs mainly at the tube ends. High velocity, abrupt change in flow direction, entrapped air and solid particles will promote erosion corrosion of tubes in coolers and condensers.

- Tubes in coolers and condensers are prone to localized pitting, dezincification or denickelification.

- Tubes in exchangers and coolers are susceptible to bulging or warping due to exposure to high temperatures above design range and may finally result in cracking.

- Sustained vibrations caused due to high velocity or pulsating vapours striking the tubes may lead to fatigue cracks or corrosion fatigue in the form of circumferential fracture of the tubes.

- When steam is used as a heating medium in tube side of exchangers and reboilers, the condensate may cause grooving or pitting in the tubes.

- Cooler tubes are susceptible to overheating due to partial/total blocking caused by:

  (a) Low velocity of water
  (b) Suspended solids in cooling water

(c)High water outlet temperature resulting in the hard deposition of $CaCO_3$.

4.3 TUBE SHEETS

- Non-ferrous tube sheets like Naval Brass or Cupro Nickel are susceptible to Dezincification or denickelification in cooling water service.

- Where tubes are prone to erosion corrosion, tube sheets also get damaged at the tube ligament areas by formation of rat holes.

- Solid particles or marine growth that settle down on the tube-sheets due to inadequate screening of cooling water will cause localized attack on tube sheets. Galvanic corrosion of tube sheets may take place at pass partition grooves when partition plates of channel or floating head cover made or noble metal like Monel of stainless steel come in contact with tube sheets of active metallurgy.

4.4 FLOATING HEAD COVER

- Floating head covers which are generally made of carbon steel or lined with monel or lead get corroded in water service at bolt holes and the holes get enlarged.

- Carbon steel pass partition plates, which are in contact with non-ferrous tube sheets, undergo galvanic corrosion.

- Floating head back up rings corrode due to retention of acidic condensate in overhead condensers.

- Failure of gaskets sometime causes crevice corrosion on gasket face of floating head cover flange.

- Low alloy strength steel stud bolts, for example ASTM-A-193 Gr. B7, crack due to sulphide stress cracking phenomenon in overhead condensers handling sour gases in presence of moisture.

4.5 CHANNEL AND CHANNEL COVER

- Channel and channel covers are prone to water side corrosion in coolers and condensers.

- Carbon steel pass partition plates corrode by galvanic action if they come in contact with noble metallurgy of tube sheets.

- Unlined carbon steel channel covers are prone to pitting and tuberculation corrosion.

- Monel lined or lead lined channels get corroded at defects in lining or its welds.

4.6 BAFFLES

- Baffles get thinned out due to general condensate corrosion in hydrocarbon streams.

- Baffle holes get enlarged due to erosion and tube vibration.

4.7 GASKETS AND GASKET SEATING SURFACES

It is recommended that when a heat exchanger is dismantled for any cause, it be re-assembled with new gaskets. This will tend to prevent future leaks and / or damage to the seating surfaces of the heat exchanger. Composition gaskets become dried out and brittle so that they do not always provide an effective seal when reused. Metal or metal jacketed gaskets, when compressed initially, flow to match their contact surfaces. In doing so they are work hardened and if reused, may provide an imperfect seal or result in deformation and damage to the gasket contact surfaces of the exchanger.

- Gasket seating surfaces of floating head cover, shell cover, channel & tube bundle are prone to scouring, erosion & pitting due to leakages from flanges.

- Use of proper gasket as recommendation by manufacture to be practiced to avoid premature failure.

Necessity of Inspection

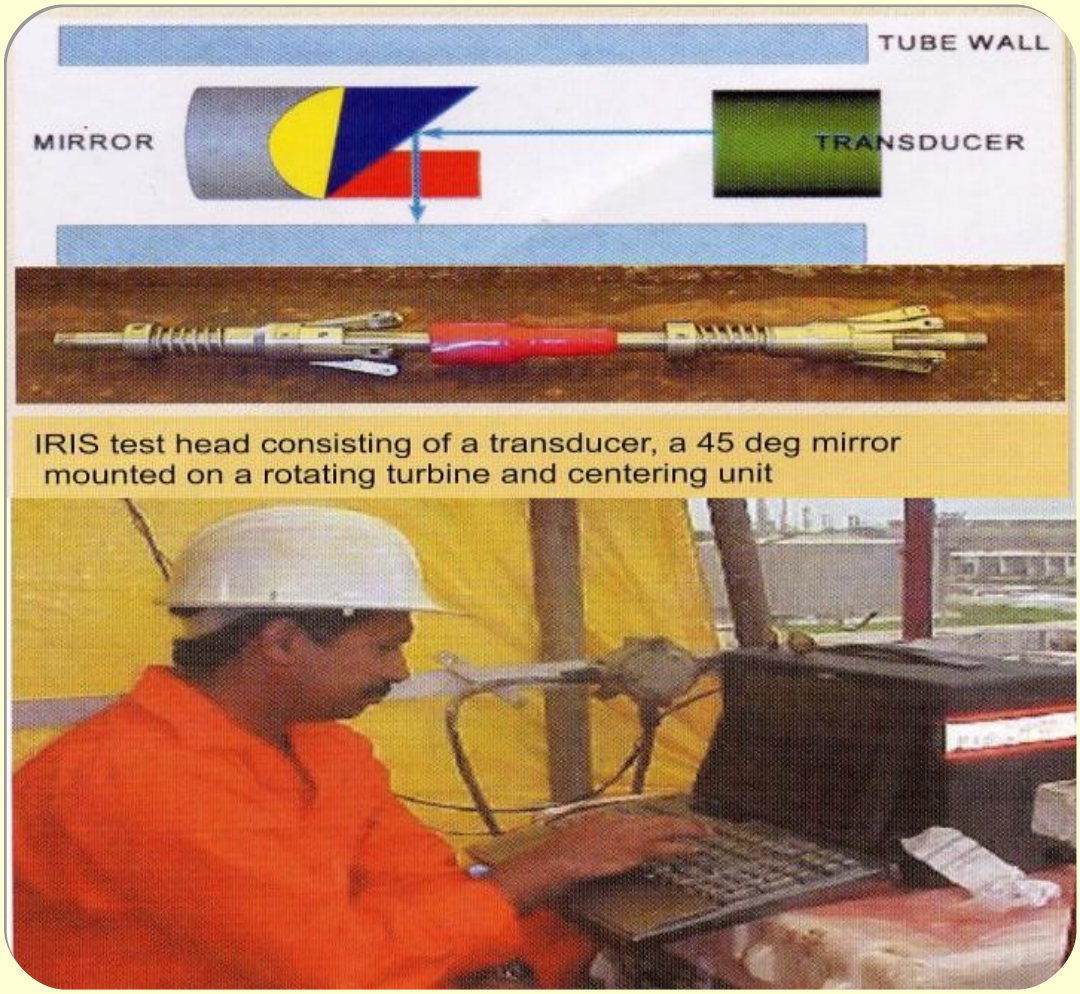

5.0 NECESSITY OF INSPECTION

Inspection of the Heat Exchangers should be carried out for the following:

- To inspect, measure and record the deterioration of material and to evaluate present health condition of heat exchanger and its components for their soundness to continue in service.
- To ensure operational requirements of heat transfer is achieved.
- To determine cause of deterioration and to advise remedial measures.
- To correlate the deterioration and to advise remedial measures.
- To recommend and forecast short term and long-term repairs and replacements to ensure further run lengths on the basis of economics and safety.
- To initiate procurement action of material to meet recommended repair/replacement needs.
- To inspect while the repairs are in progress and to accept after completion of repairs.
- To maintain upto date maintenance and inspection records and history of heat exchanging equipment.
- To keep the concerned operating and maintenance personnel informed about the condition of various heat exchangers.
- To ensure that heat exchangers are inspected as per schedule of inspection and the statutory requirements as applicable.

5.1 FREQUENCY OF INSPECTION

Following factors in general govern the frequency of inspection:

- Rate of deterioration and remaining corrosion allowance.
- Statutory requirements like IBR.
- Past experience in similar type of service.
- Shutdown of the unit.
- Operating requirements such as desired cleanliness, fouling, maintenance of required heat transfer rate etc.

After going through the service history card, a regular inspection schedule can be drawn. To determine the expected life of exchangers, following factors should be taken into consideration:-

- Corrosion rate.
- Pre-determined frequency of inspection.
- Any likely changes in process parameters.
- Frequency of shutdown of the unit.

All those equipment which can be spared during operation of the unit should be covered under preventive maintenance schedule. In case

where the exchanger can not be spared during operation, its inspection frequency will coincide with the shutdown of the unit.

After the initial commissioning of the plant, first inspection of the Heat Exchanger, Cooler and Condenser will be carried out as per designer's recommendations or after one year of service whichever is less. In general, following frequency shall be adopted for inspection, which can however be improved upon or modified depending upon service conditions and inspection requirements and findings.

- Heat Exchangers which are in corrosive service : 2 Years
- Heat Exchangers which are not in corrosive service : 4 Years
- Condensers : 2 Years
- Coolers : 2 Years

This includes thorough inspection after pulling out the tube bundles.

5.2 INSPECTION SCHEDULE

Inspection schedule shall be made by Inspection in consultation with Process, Production and Maintenance departments. In the beginning of the year, this inspection schedule shall be circulated to all concerned departments and the exchangers should be attended as per agreed schedule. Every effort shall be made to schedule inspection evenly taking into consideration the monsoons and shutdown of various units.

5.3 TOOLS FOR INSPECTION

The common tools used for inspection of heat exchangers are given below:

i) Ultrasonic flaw detector and thickness gauge.
ii) Radiographic equipment
iii) Magnetic particle inspection &Magnetic flux leakage equipment
iv) Fibro-scope/ Boro-scope
v) Dye penetrant inspection equipment
vi) Internal Rotary Inspection System (IRIS)
vii) Inspector's hammer
viii) Inside and outside calipers
ix) Flash light
x) Small magnet
xi) Small mirror
xii) Pit gauge
xiii) Steel foot rule
xiv) Plumb line and levels
xv) Scraper
xvi) Wire-brush
xvii) Magnifying glass
xviii) Eddy current tester /Remote field eddy current tester

5.4 ON-STREAM/ IN-SERVICE INSPECTION

- Inspection is to be carried out for possible leaks from the flange joints and through tell tale hole of reinforcing pads of shells.
- Conditions of ladders, platforms, foundation, pipe connections, fittings, paint, are to be inspected during operation of equipment.
- Ultrasonic thickness measurement is to be carried out for operating temperature less than 70^0C to save time during shutdown.
- It is advisable to provide inspection windows in insulated exchangers at locations vulnerable to corrosion or deterioration. Petro-scanner can also be used to detect fouling in shell.
- The water outlet temperature of cooler and condensers is to be checked periodically and ensured to be below 40^0C to prevent scaling on the internal surface to tubes.
- A record of condensate pH, Fe & Cu ppm is to be maintained as per on stream inspection manual.

5.5 INSPECTION DURING SHUTDOWN/ OUT OF SERVICE

The following points are to be taken into consideration before going ahead with M&I of any Heat exchanger.

- Passivation shall be done for all exchangers having austenitic stainless steel components before opening as per NACE RP170. A copy of NACE RP170-93 is attached herewith as an Annexure –VI for ready reference.
- Thorough inspection of all the components is to be done after pulling out of the tube bundles wherever applicable.
- Inspection shall be done before and after cleaning.
- Whenever necessary, sample of corrosion products should be collected before cleaning for further examination and chemical analysis.
- Cleaning can be done by wire brush, hydro-blasting for hydro blasting, the water shall be BFW / Soda ash solution (for austenitic stainless steel tube bundles), power tool cleaning or chemical cleaning.
- Before using any chemical for cleaning, its corrosive effect on the exchanger shall be ascertained.
- Prior to chemical cleaning of exchangers, the channel/end cover (one side) is to be opened to visual inspection of extent of fouling. The foreign particles may be physically removed and tubes are water flushed followed by box up to start the chemical cleaning.
- A typical chemical cleaning procedure followed by refinery is enclosed as annexure- VII.

Inspection Procedure

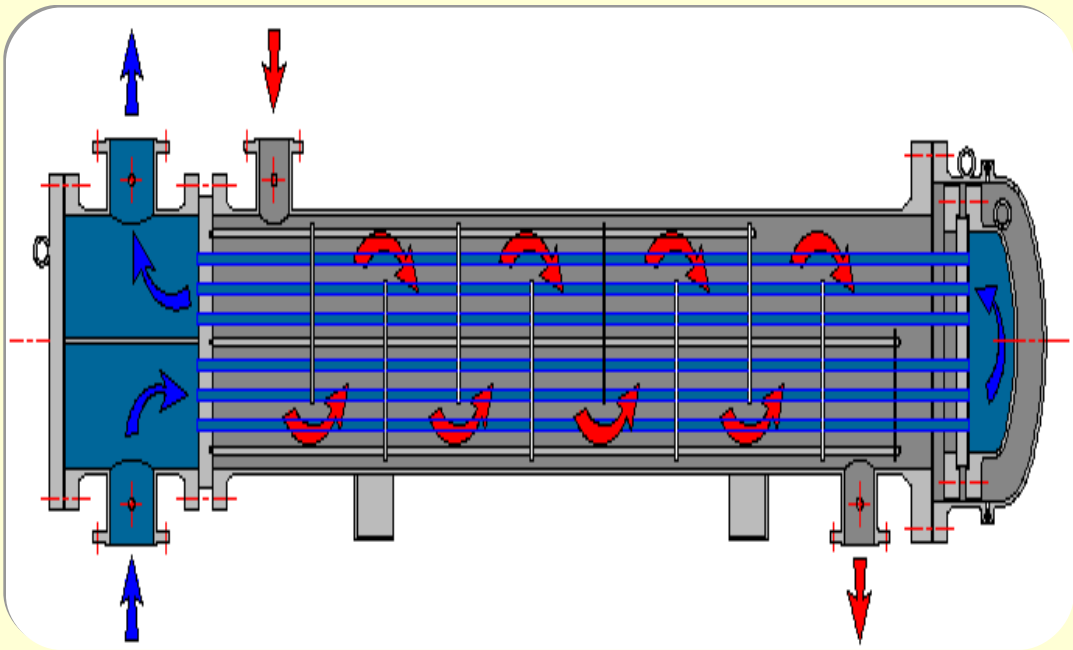

AES Type Exchanger

6.0 INSPECTION PROCEDURES

6.1 INSPECTION OF SHELL, CHANNELS AND SHELL COVERS

- General visual inspection of inside/ outside surfaces and welds shall be done for signs of pitting, grooving, scaling, crack, erosion of impingement attack etc.
- Depth of pits can be measured by pit depth gauge.
- Thickness survey of shell, nozzles and components etc. shall be carried out using ultrasonic instruments.
- Shell portions adjoining tube bundles, baffles and inlet impingement plates shall be checked for erosion corrosion.
- Carbon Steel shells need to be checked internally for localized grooving in the vicinity of non ferrous baffles due to galvanic corrosion.
- Bottom section of shell as well as areas around outlet nozzles should be critically examined in overhead condensers.
- The gasket seats of all the nozzles, shell, channel and shell cover flanges shall be visually examined for corrosion or damage. Straight edge where possible may be used for checking flatness and uniformity of gasket seats.
- In Condensers/ Coolers where water is normally on tube side, channel section and floating head shall be critically examined for pitting and corrosion.
- Thinning of partition plate edges, which may take place due to galvanic corrosion, should also be examined.
- Use of aluminum alloy sacrificed anodes in channel and floating head side is to be practiced.
- Painting of channel section, floating head with chlorinated rubber/coaltar paint after thorough cleaning is to be carried out to mitigate corrosion for cooler & condensers.
- The condition of sacrificial anodes to be checked for reuse or replacement. The procedure for installation of anodes in condensers & coolers is enclosed as annexure -V
- Drain nozzles and other small dia. connections are to be critically examined for thinning.
- Weld areas is to be critically examined if the service is caustic, Amine, particularly if shell is not stress relieved.
- Exchangers under Hydrogen service are to be checked for hydrogen blistering.
- Exchangers in Naphphenic acid environment are to be critically checked at weld joint locations for naphphenic acid attack.

6.2 INSPECTION OF TUBE BUNDLES

- Tube bundles should be inspected visually immediately after pulling out and before cleaning. The colour, type, amount and locations of deposits often help to pinpoint corrosion problems.

- Corrosion product should be got analyzed.
- Tubes near baffles shall be critically examined for any grooving and baffles shall be checked for hole enlargement.
- Tube ends should be examined for tube end corrosion and thinning.
- Brass tubes shall be checked externally for signs of dezincification or pitting or circumferential cracks.
- Internal condition of all tubes can be checked with the help of boroscope/ fiberscope, by cutting one tube as a representative tube.
- Internal condition of the tube in the peripheral or adjacent rows could be examined by radiography when the tube bundle is out of the shell.
- In case a number of tubes are found leaking during hydraulic testing it is advisable to remove one leaky tube at random for carrying out through investigation for establishing reasons of failure and deciding the residual service life of tube bundle.
- Baffles, tie rods, tube sheets and floating head covers shall be visually inspected for corrosion and distortion.
- Gasket surfaces of tube sheets shall be checked for any damage.
- Tube sheets and covers shall be checked for distortion by placing a straight edge against them.
- Tube wall thickness can be measured by measuring inside and outside tube diameter with the help of calipers.
- In case of stainless steel tube bundles, tubes should be critically examined for pitting and stress corrosion cracking.
- The tube bundle shall be retuned/ replaced after sufficient tubes have been plugged to interfere with the performance of the exchanger. As a general rule plugging in each pass is limited to 20%.
- The metallurgy of taper plug is to be preferably same to that of tube metallurgy to avoid galvanic corrosion.
- The taper plugs should have an included angle of 5-1/2 degree or less. The plug dimension depends on tube size and thickness. As a guideline a typical plug dimension and fitment arrangement is enclosed in Annexure-XI.

6.3 INSPECTION OF GASKETS

- The new gasket should be thoroughly checked for scratches and damage surface.
- Gasket should be properly positioned before tightening of bolt.
- The use of particular type of gasket as specified by manufacturer is to be ensured.

6.4 INSPECTION OF BREECH LOCK EXCHANGERS

The following components shall be cleaned thoroughly using chloride free solvents and mechanical tools. After cleaning, these shall be

checked by liquid dye penetrant/ magnetic particle testing and offered to inspection for witnessing.

(a) Following gasket seating surfaces;
- Tube sheet to shell
- Tube sheet to channel box
- Channel box to channel cover
- Diaphragm to shell barrel

(b) Lock ring and barrel acme threads

(c) Diaphragm (if replaced new one shall also be offered)

(d) Split ring, split ring grooves

(e) Inner and outer compression rings

(f) Internal flange

(g) Inner sleeve

(h) Special partition plate to channel box welded joints

(i) Shell

(j) Channel

(k) Partition plate welds

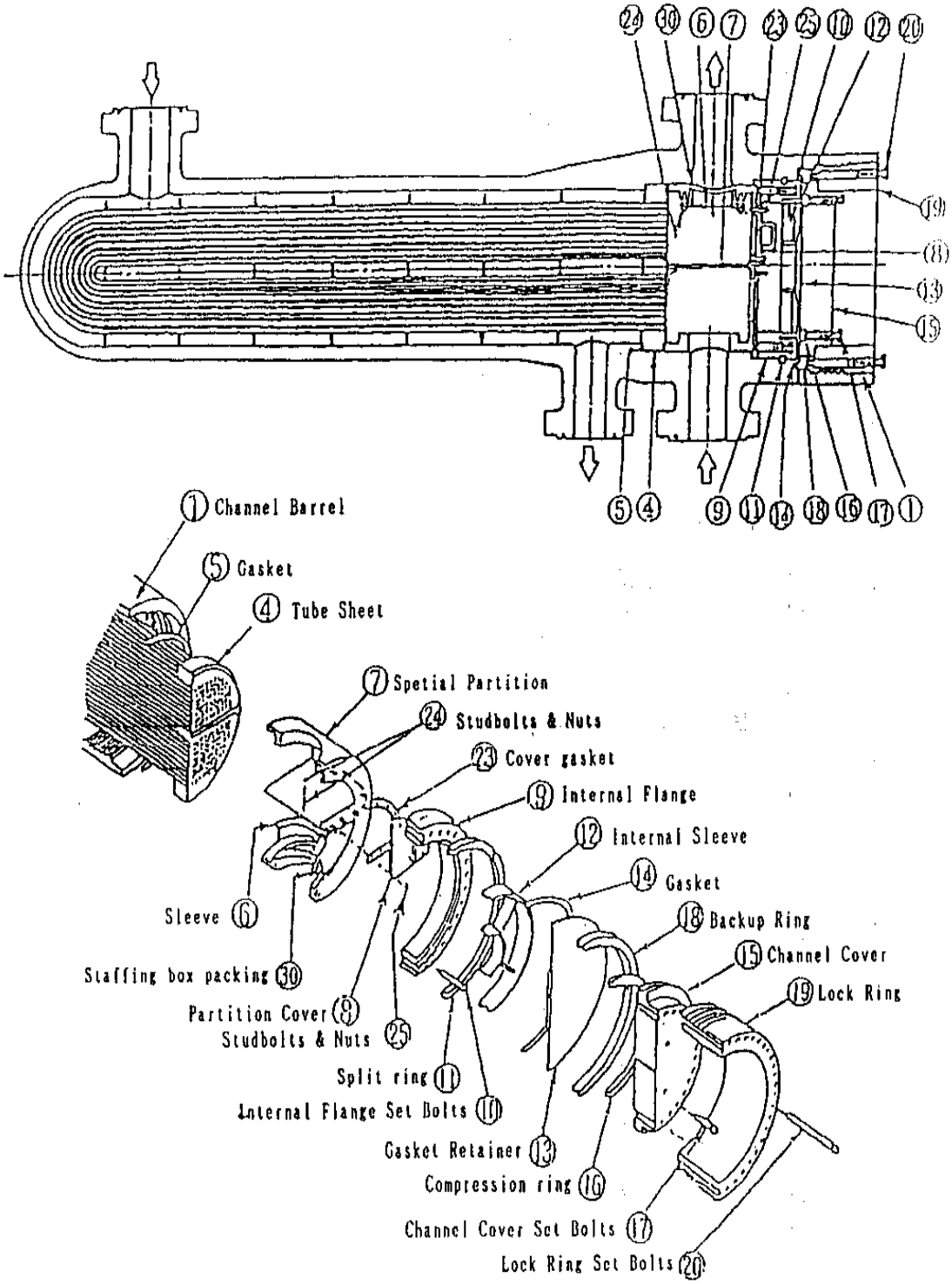

Assembly of Breech Lock Closure Type Exchanger

Breech Lock Closure Type Heat Exchanger (H-H Type)

6.5 INSPECTION OF WELDED PLATE TYPE HEAT EXCHANGERS

All Inspection and maintenance is to be done from inside the pressure vessel. Pulling out of bundle is not possible due to fully welded construction of pressure vessel. Passivation shall be done before manhole opening as per NACE RP-0170. A copy of NACE RP-170-93 is attached herewith as an Annexure –VI for ready reference. Online leak detection as mentioned in annexure-VIII to be used with specified and statutory safety measures.

Cleaning

- Chemical wash for cleaning of salt deposits.
- Steam jet flushing for cleaning of hydrocarbon fouling.
- Vacuum suction for removal of solids accumulated in header boxes.

Bundle inspection

Bundle welds repairs, channel plugging: All will be performed inside the shell. Accessibility inside the shell is a function of its diameter.

There is generally sufficient internal clearance between the shell wall and the bundle to allow an operator to perform a visual or dye penetrant test of the bundle welds. On the lower pressure units, the tendency is to oversize the vessel diameter for enhanced accessibility.

Bellows replacement: Will also be performed onsite, inside the pressure vessel. The manhole(s) are made large enough to allow insertion of replacement bellows.

6.6 INSPECTION OF TUBE-IN-TUBE COOLERS

For inspection of these coolers, inner tubes shall be pulled out completely, cleaned and inspected visually for pitting, scaling or any other type of corrosion. Outer tubes should be checked by putting light from ends. ultrasonic thickness measurement should be done on both inner and outer tubes. In case it is not possible to pull out the tube, the condition of internal tube can be examined by Radiography.

6.7 INSPECTION OF AIR FIN FAN COOLERS

Internal Inspection of tubes for fouling is to be carried out immediately after opening the plugs. After hydro-blast cleaning of internal surface of the tube to be thoroughly inspected for erosion-corrosion, tube ends thinning. The ID measurement is to be carried out and recorded. High Pressure Air Fin Fan Cooler may be internally inspected for health assessment using Internal Rotary Inspection System (IRIS) as detailed in Annexure-IX.

Testing

7.0 TESTING

All the heat exchangers shall be tested at 1.5 times the design pressure when shell or tube bundle is new or any major repairs or replacement has been carried out. The periodic test pressures shall be calculated on the basis of 1.5 times, the maximum operating pressure. Additionally the following points shall be considered while deciding the periodic test pressure.

- If the heat exchanger is directly connected to a pump, the test pressure in no case shall be less than the pump shut off pressure.
- If the shell or tube side of the heat exchanger is connected to any equipment having safety valve installed on it, the test pressure of the exchanger shall not be less than the set pressure of the safety valve.
- Wherever tube side pressure is higher than the shell side pressure, then the shell side shall be preferably tested at tube side test pressure provided the design conditions of the shell permits or the vice versa.
- Pressure gauges used in hydrotest shall be calibrated and two gauges of the same range shall be used.
- DM water shall be used for hydraulic test if material of construction is austenitic stainless steel.

The duration of hydraulic test shall not be less than 30 minutes. During hydraulic testing the pressure gauge shall be installed at the highest point. The range of the pressure gauge should be 30% more than the test pressure and the pressure gauge should be freshly calibrated.

7.1 PROCEDURE FOR TESTING OF SHELL & TUBE TYPE EXCHANGERS

Testing of shell & tube exchangers is normally done in three stages & the media for testing is usually water. In services like SO_2 where water ingress is not desirable, testing may be done with kerosene. Duration of test shall be sufficient to inspect the joints under pressure.

Shell Test

Shell test is carried out after removing shell / channel covers and floating head and providing a test ring between the floating head tube sheet & shell. Shall side of exchangers is then pressurized gradually. All the visible weld joints & the joint between fixed tube sheet and shell flange shall be checked thoroughly. Pressure drop in gauge shall be watched. In case of roll leak, re-rolling of tube end is done using suitable expander. Care should be taken to ensure that tubes are not over expanded. In case of tube leak, both the tube ends are plugged with tapered plugs. Plug material shall be same as that of tube. Pressure testing is repeated till satisfactory results are observed and

no tube/ roll leak is visible. It is desirable to remove the testing fluid from the shell by air before doing the floating head test.

Floating Head Test

Test ring on floating head side of tube bundle is removed and floating head is fitted back in position. Channel end cover is also refitted & tube side is pressured through channel section. Any leak from gasket joint of floating head, channel cover, tube sheets etc. and from tubes shall be observed. If tube is found leaking, shell test is to be repeated to plug the leaky tube. Again tube test is to be repeated till satisfactory results are obtained.

Cover Test

This test is carried out after fixing shell cover and applying pressure through shell side. The test pressure should be equal to the shell test pressure. Leak, if any, in the gasket joint of shell cover shell be observed & rectified.

7.2 PROCEDURE OF TESTING OF BOX TYPE COOLERS

The coil shall be pressured hydraulically and checked for leaks from the pipe, bends, gasket joints, and for any drop in pressure. The shell side shall be tested by water fill.

7.3 PROCEDURE OF TESTING OF TUBE-IN-TUBE EXCHANGERS

Inner tube shall be hydraulically tested individually. After boxing up of inner tube, the outer tubes shall be pressurized to check the soundness of outer tube and leakage from the joints.

7.4 PROCEDURE OF TESTING OF AIR FIN FAN COOLERS

The segment shall be pressurized hydraulically and check leaks through plugs, rolls, and gasket joints and for any drop in pressure.

7.5 PROCEDURE FOR TESTING OF BREECH LOCK EXCHANGERS

Low alloy steel particularly 2.25 Cr-1Mo have low ductile to brittle transition temperature. These low alloy steel particularly 2.25 Cr- 1Mo is susceptible to a metallurgical phenomenon of temper embrittlement. Temper embrittlement shifts the ductile to brittle transition temperature to higher values, resulting in corresponding reduction in fracture toughness and in the tolerable defect sizes at a given stress.

In order to avoid risk of brittle fracture due to pressurization to full hydrotest pressure at ambient temp., the Hydro test need to be carried out above transition temperatures. Mostly shell metallurgy of Breech

lock exchangers is alloy steel so due care shell be taken while carrying out hydrotest

During testing metal temperature of shell side is be maintained at min. of 93^0c. The skin temperature of the shell side shall be maintained throughout the test period above 93 ^{0}C for alloy steel shell material. Pressure above 20% of design pressure should not be exceeded before attaining temperature of 93 ^{0}C and for all other shell material the temperature should be above 20 ^{0}C.

Pressure gauges used in hydrotest shall be calibrated. For monitoring the test pressure on each side, two gauges of the same range shall be used.

Shell Test:

Pressure shall be raised to shell side differential test pressure and maintained for one hour.

Shell & Tube Simultaneous Hydro-test:

Shell side shall be pressurized to shell test pressure and tube side to tube test pressure simultaneously ensuring that at no time the differential test pressure between shell and tube is exceeded. Pressure to be held for min. one hour and offered for inspection. De-pressurization shall be done in such a way that at any given time the differential test pressure between shell and tube shall not be exceeded.

Tube Test

Pressure shall be raised to tube side test pressure and maintained for one hour min.

Idle Time Preservation

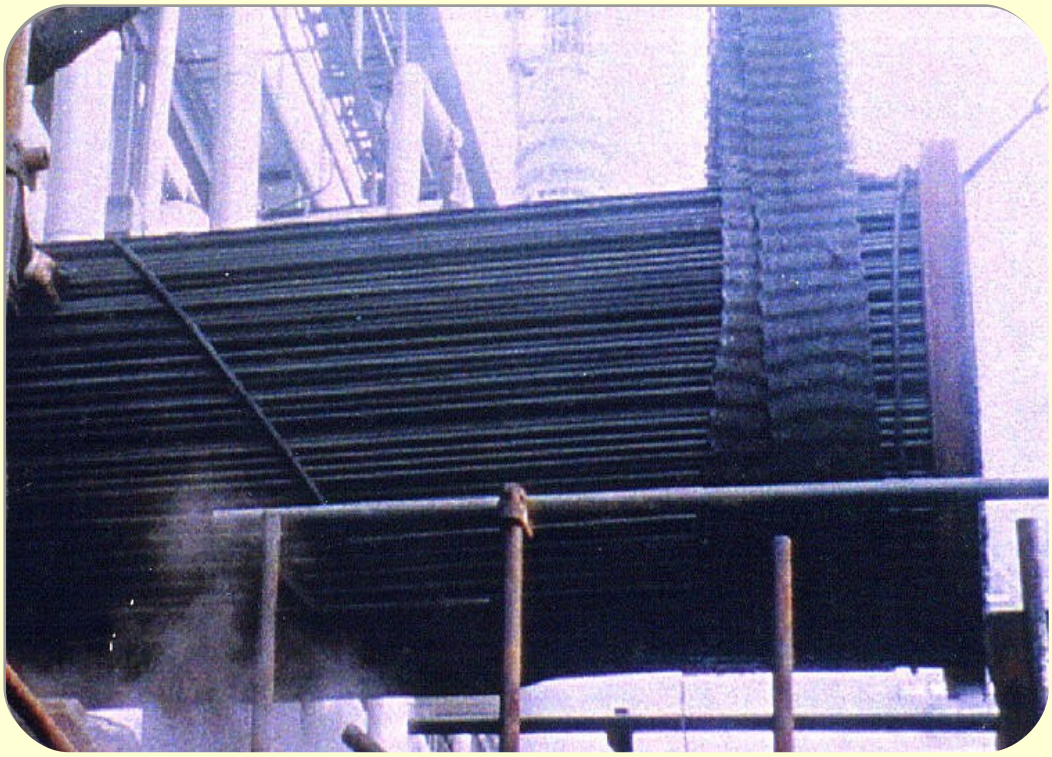

8.0 IDLE TIME PRESERVATION

8.1 PRESERVATION OF NEW EXCHANGER ASSEMBLY IN STORE

Bundles

CS & AS tube bundles shall be stored suitably covered on wooden rafters. Oil preservation spray on tube extended surface shall be done once in a year. Tube sheets shall be greased properly and covered with wooden boards.

CS & AS tube bundles can also be stored in wooden boxes with tarpaulin cover on top.

Tube bundles of brass / stainless steel and high alloy steel shall be stored on wooden rafters with proper covers. Special care needs to be taken for SS bundle to avoid chloride attack. No preservative is needed for these bundles.

Tubes

All the exchanger/condenser tubes shall be stored indoor on steel racks. CS and alloy steel tubes shall be coated with oil preservative or black bituminous paint whereas brass/ stainless steel tubes do not require any preservative. Tubes may be provided with tightly fitted HDPE/ PVC end caps.

Tube Sheets

CS and alloy steel tube sheets shall be stored indoor on wooden rafters with grease applied on it. Brass/ SS tube sheets shall be stored indoor without any preservative.

8.2 IDLE TIME PRESERVATION OF EXCHANGERS IN SULPHUR PLANT

8.2.1 Waste Heat Recovery Boilers

Tube Side: Process Gas

- Blind all the inlet and outlet nozzles and ensure all the openings are sealed and leak free excepting one inlet and outlet.
- Purge with Nitrogen and maintain a positive pressure of 5-10 psig.

Shell Side: Boiler Feed Water/MP Steam:

- Flush with D.M. water and then fill with D.M. water containing 200ppm of Hydrazine. The system shall be completely filled.

8.2.2 Sulphur Condensers (CS)

Tube Side: Process Gas

- Blind all the inlet and outlet nozzles and ensure all the openings are sealed and leak free excepting one inlet and outlet.
- Purge with Nitrogen and maintain a positive pressure of 5-10 psig.

Shell side: LP Steam / water

Flush with D.M. water and then fill with D.M. water containing 200ppm of Hydrazine.

8.2.3 Re-heaters: (CS)

Tube Side: Process Gas

- Blind all the inlet and outlet nozzles and ensure all the openings are sealed and leak free excepting one inlet and outlet.
- Purge with Nitrogen and maintain a positive pressure of 5-10 psig.

Shell Side: HP Steam / Condensate

Flush with D.M. water and then fill with D.M. water containing 200ppm of Hydrazine.

8.3 IDLE TIME PRESERVATION OF EXCHANGERS IN AMINE TREATING UNIT

8.3.1 Sour Gas Cooler

Gas side: Purge with Nitrogen and seal all the openings and maintain positive pressure of 5-10 psig with Nitrogen.

Cooling Water Sides: Drain cooling water and purge with Nitrogen and keep under positive pressure of 5-10 psig N_2.

8.3.2 Rich and Lean Amine Exchanger

Shell & Tube Exchanger

Drain amine and flush with D.M. water and air drying. Keep closed.

Welded Plate Heat Exchanger

- Perform normal washing, chemical cleaning or mechanical cleaning prior to protection.
- Disassemble plates to ensure complete cleaning and drying.

- For storage periods over twelve months, coat rubber sealing rings with a suitable compound to promote ease of removal.
- Reassemble plates. Leave drain valves open. Re-prime frame materials as necessary coat bolts and nuts with Rust preventive oil.

8.3.3 Amine Regenerator condenser

Amine side: Purge with Nitrogen and seal al the openings and maintain positive pressure of 5-10 psig with Nitrogen.

Cooling waterside: Drain purge with N2 and keep under positive pressure of 5-10 psig.

8.3.4 Amine Regenerator Re-boiler Steam Side

Keep filled with D. M. water containing 200 ppm Hydrazine.

8.3.5 Lean Amine Cooler

Amine Side: Purge with Nitrogen and seal all the openings maintain positive pressure of 5-10 psig.

Cooling Waterside: Drain purge with nitrogen and keep under nitrogen pressure of 5-10 psig.

Inspection Documentation

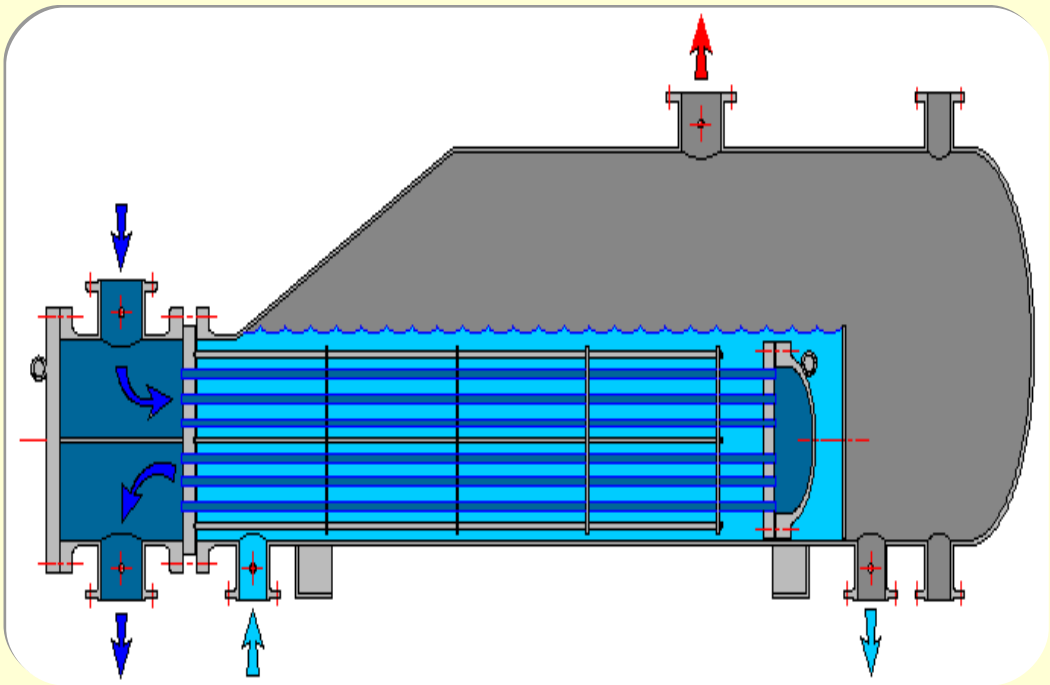

AKT Type Exchanger (Kettle Type)

9.0 INSPECTION DOCUMENTATION

Following inspection recording and documentation shall be made available for individual exchanger:

i Drawing: One set of original drawing.

ii Data Card

iii Data Record Sheet: To be prepared from equipment passport.

iv History sheet: To be maintained chronologically.

v Inspection Checklist: During M&I of exchanger the checklist is to be filled in for each exchanger and additional checklist for Breech lock exchanger. A copy of inspection checklists are enclosed as Annexure – I & II.

vi Inspection observation & Record Sheet: Visual observations, Dimension checks and Thickness record are to be done in the Inspection observation & Record Sheet. A copy of Inspection observations & Record Sheets are enclosed as Annexure – III & IV.

References

10.0 REFERENCES

- API Guide for Inspection of Exchangers, Condensers and Cooler Boxes – Chapter VII.
- TEMA Standard.
- ASME Pressure Vessel Code, Section VIII.
- Indian Standard for Unfired Pressure Vessel IS: 2825.
- API – 660 – Shell & Tube Heat Exchangers for General Refinery Services.
- IS – 4503 – Shell & Tube Type Exchangers.
- BS – 3274 – Tuber Exchangers for General Purpose.

Annexures

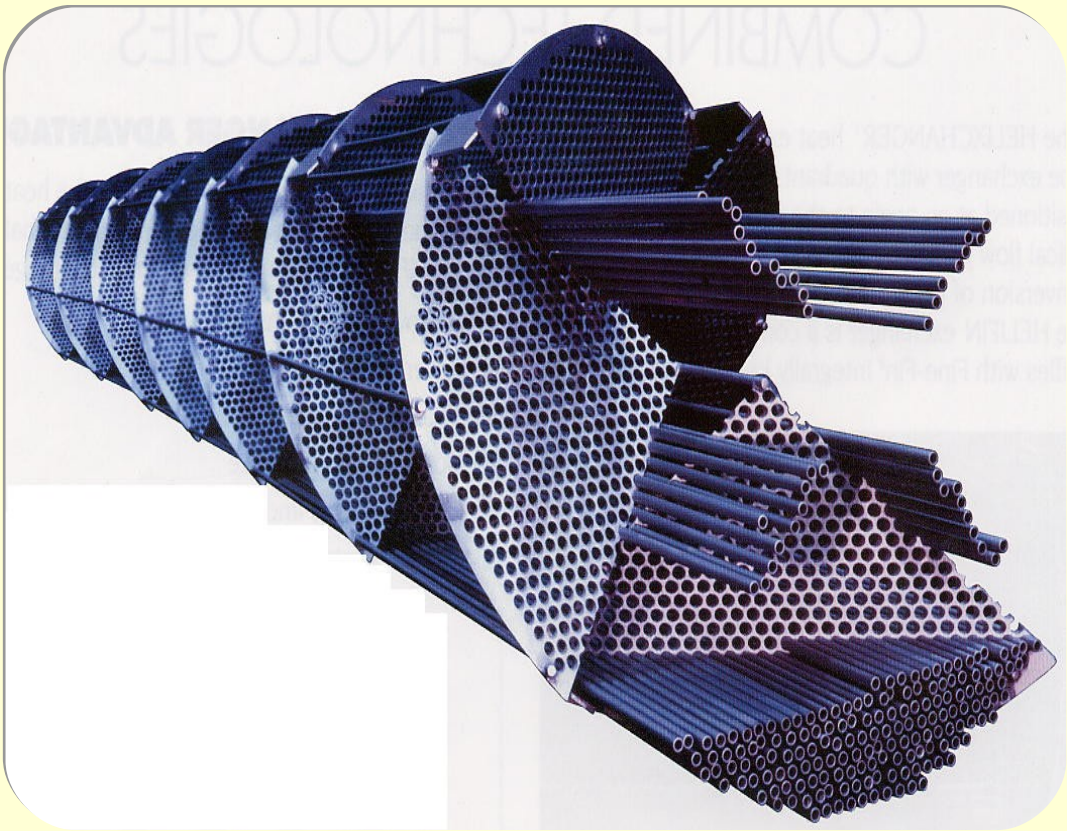

11.0 ANNEXURES

Annex-I	Inspection Checklist
Annex-II	Additional Inspection Checklist for Breech Lock Exchanger
Annex-III	Inspection Observation & Recording Sheet
Annex-IV	Inspection & Overhauling Record Sheet for Breech Lock Exchanger
Annex-V	Procedure for Installation of Anodes in Condensers & Coolers
Annex-VI	NACE International Standard Recommended Practices RP-0170-93
Annex-VII	Chemical Cleaning Procedures
Annex-VIII	Online Leak Detection Methods for Welded Plate Type Heat Exchanger
Annex-IX	Internal Rotary Inspection System (IRIS)
Annex-X	Various Shell and Tube Type Heat Exchangers
Annex-XI	Details of Heat Exchanger Tube Plugs

Annexure-I

INSPECTION CHECKLIST

Tag No. ☐ Date of Inspection ☐

Reason for Inspection	Planned	☐	Breakdown	☐	Unplanned	☐
Tube bundle pull-out	Yes	☐	No	☐	Not applicable	☐

Material

Shell & Component	CS	☐	AS	☐	SS	☐	Cladded	☐
Tubes	CS	☐	AS	☐	SS	☐	Others	☐

External Condition

Insulation	Satisfactory	☐	Needs Repairs	☐
Shell under Insulation	Satisfactory	☐	Needs Repairs	☐
Earthing Connection	Satisfactory	☐	Needs Repairs	☐
External Paint	Satisfactory	☐	Needs Repairs	☐

As Opened Condition

Passivation as per NACE	N/A	☐	Done	☐	Not Done	☐	
Shell Side Fouling:	Negligible	☐	Moderate	☐	Heavy	☐	Colour:
Tube side fouling	Negligible	☐	Moderate	☐	Heavy	☐	Colour:

Shell	Satisfactory	☐	Needs Repairs	☐
Tubes	Satisfactory	☐	Needs Repairs	☐

No. of Tubes plugged Total Nos. ____ Max in one Pass: ____

Channel Box	Satisfactory	☐	Needs Repairs	☐
Partition Plate	Satisfactory	☐	Needs Repairs	☐

St. Tube sheet	Satisfactory	☐	Needs Repairs	☐		
FI Tube-sheet	Satisfactory	☐	Needs Repairs	☐	Not applicable	☐
FI Head Cover	Satisfactory	☐	Needs Repairs	☐		

Baffles	Satisfactory	☐	Needs Repairs	☐
Tie Rods	Satisfactory	☐	Needs Repairs	☐

Sacrificial Anodes	Satisfactory	☐	Needs Repairs	☐
Epoxy Paint	Satisfactory	☐	Needs Repairs	☐

As Cleaned Conditions:-

Shell/ Components Observation	Thinning	☐	Pitting/ grooving	☐	Satisfactory	☐
Recommendations	Serviceable	☐	Partial repair	☐	Replacement	☐
Tube Bundle						
Observations	Satisfactory	☐	Tube end thinning	☐	Plugging	☐
Recommendations	Serviceable	☐	Partial reliability	☐	Replacement	☐

NDT	Thickness Survey	☐	DP of Nozzle Joint	☐	MPI/ Others	☐
Tell-Tale Hole	Visual Inspection	☐	NDT	☐	Testing	☐
Expansion Slot	Satisfactory	☐	Needs repair	☐	Not provided	☐
Hydraulic Test				☐		☐
Medium			Potable Water	☐	DM Water	☐

Testing record

	Design pressure Kg/MM^2	Hydrotest Pressure Kg/MM^2	Date of hydro-test Kg/MM^2	
Shell test (Ring Test)				New Plugs.:
Floating head (Tube) test				
Shall Cover (Final) test				

Remarks

Sign: Inspector **Inspection Manager**

Annexure –II

ADDITIONAL INSPECTION CHECKLIST FOR BREECH LOCK EXCHANGERS

Tag No.		Licenser		Manufacturer		Date	

Lock Ring	Visual Inspection		Dimension check		UT		MPI	
Push Road	Visual Inspection		Dimension check		DP		MPI	
Push Bolt	Visual Inspection		Dimension check		DP		MPI	
Back-up & Compression Ring	Visual Inspection		Dimension check		DP		MPI	
Gasket Retainer/ Diaphragm	Visual Inspection		Dimension check		DP		MPI	
Split Ring & Groove	Visual Inspection		Dimension check		DP		MPI	
Tube Sheet	Visual Inspection		Dimension check		DP		MPI	
Lamiflex Seal	Visual Inspection		Dimension check		DP		MPI	
Shell & Tube Bundle (After Cleaning)	Visual Inspection		Dimension check (roundness)		DP/ MPT		UT/ flaw	
Nozzle	Visual Inspection		Dimension check		DP/ MPT		UT/ flaw	
Gasket Seating Areas	Visual Inspection		Dimension check		DP/ MPT		UT	
Special Partition Plate	Visual Inspection		Dimension check		DP/ MPT		UT	
Internal Flange	Visual Inspection		Dimension check		DP/ MPT		UT	

Sl. No.	Activity Description	Signature of Clearing Authority (XXX)

		Insp.	Maint.	Prod.
1.	Tube bundle inspection			
2.	Shell hydro-test			
3.	Box-up			
4.	Differential hydro-test			
5.	Final box-up			

Remarks

Agency

XXX, Inspection

Annexure-III

INSPECTION OBSERVATION & RECORDING SHEET FOR SHELL & COMPONENT

Tag No. _____ Date of Inspection _____

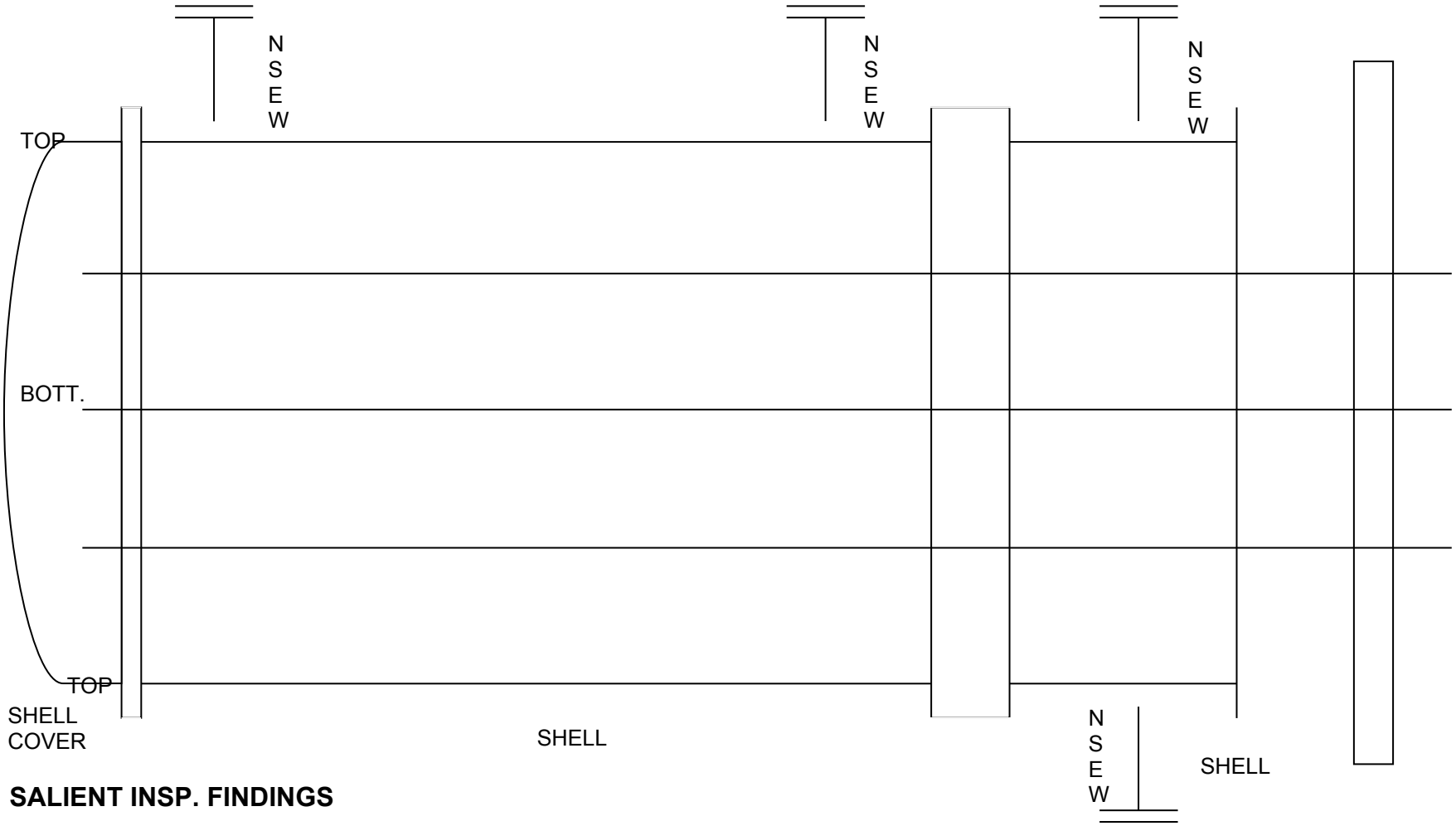

SALIENT INSP. FINDINGS

IndianOil

Annexure-IV

INSPECTION & OVERHAULING RECORD SHEET FOR BREECH LOCK EXCHANGERS

Tag No. [ ] Licenser [ ] Manufacturer [ ] Date [ ]

1. Lock Ring

(a) Visual Inspection

(b) Dimensional Check

i) Protrusion Measurement

Before opening

After Assembly

ii) Acme Thread pitch/height

Existing

As per Drawing

(c) NDT

i) DP Test

ii) MPT

Remarks

Agency XXX, Inspection

INSPECTION & OVERHAULING RECORD SHEET FOR BREECH LOCK EXCHANGERS

Tag No. [ ] Licenser [ ] Manufacturer [ ] Date [ ]

2. Pusher

(a) Visual Inspection

(b) Dimensional Check

Description	Length	Diameter
i) Dimension as per Drawing.		
ii) Spares dimension		
iii) Dimension Existing		

(c) NDT

i) DP Test

ii) MPT

Remarks

Agency XXX, Inspection

INSPECTION & OVERHAULING RECORD SHEET FOR BREECH LOCK EXCHANGERS

Tag No. [ ] Licenser [ ] Manufacturer [ ] Date [ ]

3. Push Bolt

(a) Visual Inspection

(b) Dimensional Check

Description	Length	Diameter
i) Dimension as per Drawing.		
ii) Spares dimension		
iii) Dimension Existing		

(c) NDT

i) DP Test

ii) MPT

Remarks

Agency XXX, Inspection

INSPECTION & OVERHAULING RECORD SHEET FOR BREECH LOCK EXCHANGERS

Tag No. [ ] Licenser [ ] Manufacturer [ ] Date [ ]

4. Back up & Compression Ring

(a) Visual Inspection

(b) Dimensional Check

Description	Length	Diameter
i) Dimension as per Drawing.		
ii) Dimension Existing		

(c) NDT

iii) DP Test

iv) MPT

Remarks

Agency XXX, Inspection

INSPECTION & OVERHAULING RECORD SHEET FOR BREECH LOCK EXCHANGERS

Tag No. [ ] Licenser [ ] Manufacturer [ ] Date [ ]

5. Gasket Retainer/ Diaphragm

(a) Visual Inspection

(b) Dimensional Check

Description	Present Dimension as measured in MM			
	As per Drawing		As actual	
Retaining Ring				
Diaphragm				

(c) NDT

i) DP Test

Remarks

Agency XXX, Inspection

INSPECTION & OVERHAULING RECORD SHEET FOR BREECH LOCK EXCHANGERS

Tag No. [ ] Licenser [ ] Manufacturer [ ] Date [ ]

6. Split Ring and Groove

(a) Visual Inspection

(b) Dimensional Check

Description	Depth	Width
i) Dimension as per Drawing.		
ii) Actual groove gap		

(c) NDT

i) DP Test

ii) MPT

Remarks

Agency XXX, Inspection

INSPECTION & OVERHAULING RECORD SHEET FOR BREECH LOCK EXCHANGERS

Tag No. [ ] Licenser [ ] Manufacturer [ ] Date [ ]

7. Tube Sheet

(a) Visual Inspection

(b) Dimensional Check

Description	
i) Thickness of Tube Sheet	
ii) Thickness of Tube sheet as measured	

(c) NDT

i) DP Test

Remarks

Agency XXX, Inspection

INSPECTION & OVERHAULING RECORD SHEET FOR BREECH LOCK EXCHANGERS

Tag No. [ ] Licenser [ ] Manufacturer [ ] Date [ ]

8. Lamiflex Seal

(a) Visual Inspection

Description	Remarks
Seal Existing	
Spare Seal	

Remarks

Agency XXX, Inspection

INSPECTION & OVERHAULING RECORD SHEET FOR BREECH LOCK EXCHANGERS

Tag No. [ ] Licenser [ ] Manufacturer [ ] Date [ ]

9. Shell & Tube Bundle (After Cleaning)

(a) Visual Inspection

Description		Observations
Shell	Internal	
	External	
Tube	Internal	
	External	

(b) NDT

i) DP Test

ii) MPT

iii) UT

iv) UT Flaw

Remarks

Agency XXX, Inspection

INSPECTION & OVERHAULING RECORD SHEET FOR BREECH LOCK EXCHANGERS

Tag No. [ ] Licenser [ ] Manufacturer [ ] Date [ ]

10. Nozzles

(a) Visual Inspection

(b) NDT

i) DP Test

ii) MPT

iii) UT

iv) UT Flaw

Remarks

Agency XXX, Inspection

INSPECTION & OVERHAULING RECORD SHEET FOR BREECH LOCK EXCHANGERS

Tag No. [ ] Licenser [ ] Manufacturer [ ] Date [ ]

11. Gasket Seating Areas

(a) Visual Inspection

(b) NDT

i) DP Test

ii) MPT

iii) UT

Remarks

Agency XXX, Inspection

INSPECTION & OVERHAULING RECORD SHEET FOR BREECH LOCK EXCHANGERS

Tag No. [ ] Licenser [ ] Manufacturer [ ] Date [ ]

12. Tube Sheet

(a) Visual Inspection

(b) NDT

i) DP Test

ii) MPT

iii) UT

Remarks

Agency XXX, Inspection

INSPECTION & OVERHAULING RECORD SHEET FOR BREECH LOCK EXCHANGERS

Tag No. [ ] Licenser [ ] Manufacturer [ ] Date [ ]

13. Internal Flange

(a) Visual Inspection

(b) NDT

i) DP Test

ii) MPT

iii) UT

Remarks

Agency XXX, Inspection

Annexure-V

PROCEDURE FOR INSTALLATION OF ANODES IN CONDENSERS & COOLERS

1.0 Scope:

Anodes are installed as a protective measure against waterside corrosion in channel and floating head covers of condensers and coolers having brass tube bundles and C.S. shell and attachments.

2.0 Materials:

The material of anode shall be Aluminium alloy as developed by Naval Chemical and Metallurgical laboratory, Mumbai. The Aluminium shall be of 99% purity and the maximum Iron content should not exceed 0.13%. The fittings and attachments shall be of specified material given in the drawing attached.

3.0 Design:

The anode shall be cylindrical having 100mm/ 150mm/ 200mm dia and 50mm thickness with a galvanized M.S. cast insert as incorporated in the attached drawing. The required number of anodes and the size shall be selected depending on the surface area to be protected.

4.0 Location:

Anodes shall be fitted in each section of the channel and floating head cover. The anode shall be located centrally on the channel partition plate and floating head cover.

5.0 Painting:

After through cleaning by sandblasting, one coat of zinc Chromate / Zinc Phosphate primer followed by two coats of chlorinated rubber paint/coal tar epoxy shall be applied on (a) tube sheet (b) channel section including partition plate, floating head cover and underside of anodes.

6.0 Installation

Installation of anodes shall be done in accordance with the details given in the drawing. Proper metal-to-metal contact shall be ensured by welding to stud. Vinyl tape & paint shall be applied between anode and C.S. surface as shown in the enclosed sheet.

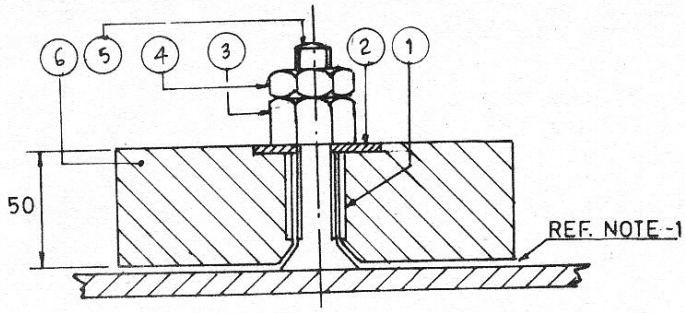

INSTALLATION ON PARTITION PLATE

BILL OF MATERIAL

S.No.	NAME	QTY.	MATL.	SIZE
1.	INSERT	1.	M S GALV	Ø 22mm BORE PIPE
2.	WASHER	1.	M S GALV	M-20 STD.
3.	HEX. NUT	1.	M S GALV	M-20 STD.
4.	CHECK NUT	1.	M S GALV	M-20 STD.
5.	STUD	1.	M S GALV	M-20×90
6.	ANODE	1.	AL. ALLOY	ϕ100/ϕ150/ϕ200

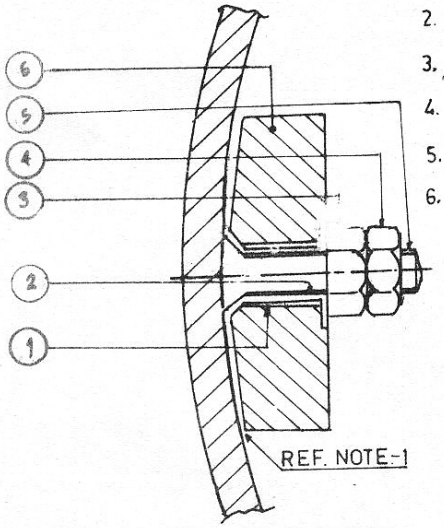

INSTALLATION ON FLOATING HEAD COVER

NOTE

(1) THIS SIDE OF ANODE TO BE PAINTED

(2) VINYL TAPE (0.003" Thick) TO BE PUT BETWEEN ANODE AND PARTITION PLATE

DETAIL OF ALUMINIUM ALLOY ANODE INSTALLATION

Annexure -VI

NACE RP-0170 ON PROTECTION OF AUSTENITIC STAINLESS STEEL EQUIPMENT

Protection of Austenitic Stainless Steel and Other Austenitic Alloys from Polythionic Acid Stress Corrosion Cracking during Shutdown of Refinery Equipment

1.0 General

1.1 If sulfide corrosion products are present on the surfaces of austenitic stainless steel and other austenitic alloy process equipment, there is a definite risk of polythionic acid stress corrosion cracking (SCC) when oxygen (air) and water are admitted during an outage. Tensile stresses, both residual and applied, are usually present in "cold" equipment. In the presence of polythionic acids, SCC may occur in stressed austenitic stainless steels and other austenitic alloys that are in a sensitized condition.

1.1.1 Polythionic acid SCC normally occurs with the standard (0.08% carbon max.) and high carbon (0.10% max.) grades that have become sensitized either by weld fabrication or by operation in the sensitizing range of 370^0 to 815^0C (700^0 to 1500^0F).

1.1.2 Low-carbon (0.03% max) and chemically stabilized grades (e.g., alloys with titanium or columbium alloying additions) may also become sensitized by prolonged exposure in the sensitizing temperature range. Sensitization will be more rapid in the presence of carbon (coke).

1.1.3 The resistance of chemically stabilized stainless steels and other austenitic alloys to polythionic acid SCC may be significantly improved by thermal stabilization treatment.

1.2 The degree of sensitization and stress levels are generally not known. Therefore, austenitic stainless steel and other austenitic alloy process equipment on which sulfide corrosion products may be present should be protected using one or more of the following methods.

1.2.1 Exclusion of oxygen (air) and water by using a dry nitrogen purge.

1.2.2 Alkaline washing of all surfaces to neutralize any polythionic acids that may form. (Field experience has demonstrated that austenitic stainless

steels and other austenitic alloys are effectively protected with properly applied alkaline solutions.)

1.2.3 Exclusion of water by using a dry air purge with a dew point lower than –15^{0}C (5^{0}F).

1.3 If process equipment remains unopened and "hot" (above the water dew point of the gas in the equipment), additional protection is unnecessary.

1.4 The internal surface of austenitic stainless steel and other austenitic alloy furnace tubes maybe susceptible to polythionic acid SCC whether or not they have been thermally decoked and should be protected. If thermally decoked, protection should be performed after decoking.

1.5 Protection of the external surfaces of austenitic stainless steel and other austenitic alloy furnace tubes should be considered when sulfur containing fuels have been used for furnace firing.

2.0 Nitrogen Purging

2.1 Process equipment may be protected by keeping it tightly closed and purging with dry nitrogen to exclude oxygen (air). Use of dry nitrogen is an effective means of lowering the water dew point temperature to less than ambient. Nitrogen purging provides optimum protection for catalysts.

2.2 If reactors to be opened but furnaces are not, the furnaces may be purged with nitrogen and blinded off. A small positive nitrogen pressure should be maintained.

2.2.1 Nitrogen should be dry and free of oxygen. (The user is cautioned that oxygen levels as high as 1000 ppm have been found in commercial nitrogen).

2.3 At the user's discretion, 5000 ppm ammonia may be added to the nitrogen.

1.3.1 The addition of ammonia is generally unnecessary when purging with dry nitrogen, but may be advantageous where water and/ or oxygen may be present.

1.3.2 Ammonia is toxic, and fresh air breathing equipment must be worn during installation and removal of blinds.

1.3.3 Copper based alloys must be isolated from ammoniated nitrogen.

1.3.4 It should be determined that ammonia will not have an adverse effect on catalyst.

2.4 Nitrogen purging is preferable for protection of vertical tube heaters if alkaline wash solutions cannot be drained fully.

2.5 If steam is being used for purging or steam air decoking, steam injection should be stopped before the metal temperature cools to 56^{0}C (100^{0}F) above the water dew point. When de-pressured, but before cooling lower than 56^{0}C (100^{0}F) above the water dew point, the system should be purged with dry nitrogen. Some purge flow should be maintained until blinds are installed. A positive nitrogen purge pressure should be maintained on the system after blinding.

2.6 The user is cautioned that wearing fresh-air breathing equipment in nitrogen-purged equipment requires special precautions, in accordance with local plant safety procedures.

3.0 Alkaline Wash Solutions

3.1 Sodium carbonate (soda ash) solutions are used to protect austenitic stainless steels and other austenitic alloys from polythionic acid SCC. Solution pH should be greater than 9. These solutions may also contain an alkaline surfactant and corrosion inhibitor.

3.2 The recommended wash solution is 2 wt% soda ash (industry practice varies from 1 to 5 wt%, with a majority using 2 wt% solutions). A 1.4 to 2 wt% soda ash solution will provide a sufficient level of residual alkalinity on metal surfaces after the solution drain from the equipment. Additionally, this low concentration will facilitate solution preparation.

3.2.1 The use of caustic soda is not recommended.

3.2.2 Experience with potassium carbonate is limited. No cracking has been reported by those who have substituted it for soda ash.

3.3 Because of successful past experience with solutions containing small amounts of chloride, it is not always necessary to provide chloride-free solutions.

3.3.1 Chloride concentration in the freshly mixed wash solution should be limited to 150 ppm. This nominal chloride limit is attainable with commercially available chemicals.

3.4 In special cases, flushing with ammoniated condensate may be necessary. The solution should have a pH above 9 and a chloride content of less than 5 ppm.

3.5 The addition of an alkaline surfactant to the wash solution at 0.2 wt% concentration is recommended to promote penetration of coke, scale, or oil films. Heating of the wash solution to 49^0C (120^0F) may accelerate the penetration of oily films and residues.

3.6 Corrosion inhibitors have been used to decrease the possibility of chloride SCC by these alkaline solutions.

3.6.1 *At* the user's option, 0.4 wt% sodium nitrate maybe added. (In laboratory tests, low concentrations of sodium nitrate have been found to be effective in suppressing SCC of austenitic stainless steel in boiling magnesium chloride solutions). Caution: Excess $NaNO_3$ can cause SCC of carbon steel.

4.0 Alkaline Washing

4.1 Austenitic stainless steel and other austenitic alloy equipment to be opened to the air is best protected with a soda ash solution (defined in section-3). Soda ash solutions neutralize acids and, after draining, leave a thin alkaline film on the surface that can neutralize any additional acid formation. It is vital that this film not be washed off and that it remains in place as the equipment goes back on-stream.

4.1.1 The equipment must be alkaline washed before any exposure to air. It is very important to contact 100% of the equipment's internal surfaces.

4.1.2 The equipment should be soaked for a minimum of two hours. If deposits or sludges are present, the solution should be circulated vigorously (two hours minimum). Longer times are not detrimental in either case.

4.1.3 The circulating solution should be analyzed at appropriate intervals to ensure that pH and chloride limits are maintained.

4.1.4 It is essential that the alkaline wash not be followed by a water wash.

4.1.5 Each system must be evaluated individually and precautions taken to ensure that unvented gas pockets or cascading through down-flow sections do not prevent complete surface contact.

4.1.6 If washing the outside of furnace tubes is necessary to remove deposits, a soda ash solution should be used because these surfaces my be subject to polythionic acid SCC.

4.2 Hydrojetting of equipment should be conducted using a soda ash solution.

4.2.1 After hydrojetting, equipment should be kept dry and out of the weather. If this is not possible, the soda ash wash should be repeated as required to maintain a residual film of soda ash. Equipment shall be reinstalled with soda ash residual film left on surfaces.

4.3 Hydrostatic testing of equipment should be conducted using a soda ash solution. Ammoniated condensate may be used if the equipment is not reopened or exposed to oxygen (air).

4.4 If sodium chloride ions cannot be tolerated in the process system, the equipment can be washed with ammoniated condensate after being closed. If the unit is not started up immediately, the solution can be left in place or displaced with nitrogen or dry hydrocarbon. The unit must not be exposed to oxygen (air) after this procedure. Ammonia solutions do not leave a residual alkaline film after being drained.

4.5 On completion of alkaline washing, all remaining alkaline solution must be drained from all low points in the system prior to returning

equipment to service. Failure to do so can result in concentration of carbonate and chloride salts by evaporation, which can also lead to SCC in austenitic stainless steels.

5.0 Protection of Reactors

5.1 Reactors containing catalyst require special consideration. Personnel safety and protection of the catalyst may dictate the use of procedures that are less than optimum in terms of protection from polythionic acid SCC.

5.1.1 Non-regenerated catalysts frequently are pyrophoric. This may require that such catalysts either be kept wet or out of contact with oxygen (air) by the use of nitrogen purging.

5.2 Industry experience suggests that austenitic low-carbon and stabilized grade weld overlays and stabilized grade wrought internals in reactors are very resistant to polythionic acid SCC for reactor operating temperatures below 450^0C (850^0F).

5.3 Recommended procedures for protection of reactors that will be opened for entry and have a history of successful use in the field are as follows:

5.3.1. Catalyst unloading and loading can be conducted under nitrogen-blanketing conditions by personnel using appropriate fresh-air breathing equipment. Following unloading, the reactor is purged with dry air and this purge is maintained while the reactor is open. Purge air dew point temperatures from -15^0 to -46^0C (5^0 to -50^0F) have been used.

5.3.2 If the catalyst is to be discarded, the reactor can be filled with soda ash solution to wet both catalyst and reactor parts. The solution strength should be increased to 5 wt% to compensate for the acidity of deposits held by the catalyst. Unloading can then be conducted in air while keeping the catalyst wetted with soda ash solution to prevent pyrophoric ignition. The reactor should then be washed down with soda ash solution and dried prior to repairs or catalyst loading.

5.3.3 If the user wishes to eliminate the use of soda ash solutions and fresh air breathing equipment while unloading the catalyst, the catalyst may be dumped, following wetting with good quality fresh water (less than

50 ppm chloride), without nitrogen purging. This should be preceded by a careful investigation to determine that:

(1) Only stabilized grades have been used where austenitic stainless steel materials have been specified.

(2) These alloy materials have not become sensitized as a result of either vessel fabrication procedures or the reactors thermal history during operation.

This procedure involves some risk of polythionic acid SCC through either accidental use of unstabilized grades or misinterpretation of the thermal history of the reactor.

Annexure – VII

CHEMICAL CLEANING PROCEDURES FOR THE HEAT EXCHANGER

i) Before chemical cleaning, rodding of the tubes are done to make passage for chemical circulation.

ii) A solution of 10% ASFOCLEAN-HD + 2% Emulsoil by volume is prepared in a tank mounted on a trolley. This solution is circulated for a period of 10 to 12 hours at a temperature of 60^0C to 70^0C. The pH value is maintained between 9 and 10.

iii) The solution is then drained and the system flushed thoroughly with water. If required it is again flushed with water-air and steam to remove the loose material.

ASFOCLEAN-HD is an alkaline base chemical in powder form and can be used for ferrous as well as nonferrous metal like Brass.

Manufactured by: M/s Ashok Industry
101 Kakad Chambers
132 Dr. Annie Besand Road, Warli, Mumbai-18

Annexure – VIII

ON LINE LEAK DETECTION METHODS FOR WELDED PLATE TYPE HEAT EXCHANGERS

M/s Packinox know of 4 methods that can be used in service for determining the exchanger inter circuit leakage:

1. Quantitative chemical analysis of 2 samples: Naphtha-Feed & stabilized reformate product.
2. Quantitative chemical analysis of 3 samples: Naphtha feed & 2 de-pentanized product of exchanger effluent inlet & product separator.
3. Chemical tracer (Phenol or Cresol) – Continuous tracer injection.

Analysis of 2 samples

When one suspects leakage in the reformer, combined, feed/effluent, exchanger, leak detection, generally commences from an accurate chemical analysis of the feed & reactor product. Measuring levels in the effluent of specific compounds such as di-methly cyclohexane (DMC) which should be completely converted in the reactor gives an indication of the extent of the leak. Conversion dependent leak testing is not always accurate as reductions in catalyst activity can technique is to measure the ratios in feed & effluent of:

- Methylcyclohexane / 1-trans 2-dimethyl cyclohexane
- Cyclohexane / methyl cyclopentane.

Advantages

- Simple sampling procedure, with juts 2 normal plant samples,
- No need to set up chemical injections or call in outside specialists.

Disadvantages

- Low catalyst activity can imply higher leak, due to incomplete cyclohexane conversion.

Analysis of 3 Samples

This method works by direct measurement of any change in bulk quality of reactor effluent as it passes through the heat exchanger.
At the exchanger effluent inlet a hot vapour sample is condensed at the sampling point & its condensate-liquid collected under pressure using the Cat. Reformer Reactor Sampler (“RS”).

This method simulates the way reactor product is collected in the Cat. Reformer's Cold Product Separator ("CPS").
Liquid samples from RS & CPS are then de-pressured into glass sample bottles, during which small but equal amounts of C_6^{minus} flash off from each sample. This process ensures that chemical analysis of RS & CPS samples will be exactly the same if there is no exchanger leak. (N.B. Stabilized reformate has more C_6 than the RS sample).

In the refinery lab, these 2 samples are de-pentanized (topped to 48^0C) for comparison with normal naphtha feed sample.

Refractive indices (R) are measured.
R1 = Naphtha Feed R2 = RS R3 = CPS

$$\text{Leak (\%wt)} = \frac{(R3 - R1)}{(R2 - R1)}$$

Advantages

- Accurate, simple principle, easily performed by refinery staff.
- No chemical or radioactive injections, no need for multiple samples.

Disadvantages

- Pressurized & high temperature sampling required.

Phenol or Cresol Trace Injection

Due to the uncertainties of the Analysis of 2 sample method., Phenol or Cresol Trace injection is frequently used to obtain an accurate measure of the extent of the leak. The method following in Appendix 1 is typical.

With this method all traces of Phenol (or Cresol) entering the reactor should be completely destroyed (like DMS). However the chemical tracer is continuously injected at constant rate for a period (15-30 min.) to establish a steady equilibrium of level unconverted Phenol in the separator liquid product. A steady equilibrium is necessary, as it is not feasible to sample every couple of seconds with slug injection.

Advantages

- Rather accurate leak estimate.

Disadvantages

- Requires injection equipment & toxic chemical handling procedure.
- Multiple samples & analyses required.

Radioactive Tracer Injection

In addition to measuring the extent of the leak, this method may give some indication as to the location of the leak (top, bottom or middle of bundle).

The principle is slug injection of a radioactive tracer & measuring retention time for the tracer to be detected in the effluent outlet. If there is no leak, no isotope will detected in the exchanger effluent outlet until it has flowed all the way through the reactor + exchanger loop. If there is exchanger cross-circuit leakage, part of the isotope will by-pass the reactor (& part of the exchanger?) so the retention time to measurement will be less.

Whilst it is possible to imagine a similar retention time test being performed chemically (e.g. by Phenol injection) this is not practical as the frequency of sampling would have to be every few seconds to obtain a representative result.

Advantages

- Method can determine zone of exchanger leak location (bottom, top, middle).

Disadvantages

- Requires external specialists such as Tracerco (cost?)
- Calculation of extent of leak % can be less clear & simple than other methods.

Appendix 1: Typical Procedure for Packinox Exchanger Leak Measurement Employing Phenol Tracer

Introduction

Phenol is injected together with the naphtha feed & is employed as a tracer detects the cross-circuit (feed-to-effluent) leak rate in the combined feed/effluent exchanger. Phenol entering the cat reformer reactor should be completely decomposed, in the case that Phenol is detected in the effluent leaving the reactors, it is likely that a fraction of the feed is by-passing the reactor circuit due to leak in the combined feed/effluent exchanger. The amount of Phenol entrained with the reformate has only marginal effect on the downstream product since contamination is of the few ppm range.

Preparation

1. Prepare sampling point on the feed line after the Phenol injection point – Possibly across the feed control valve. Also prepare sampling point after the reactor effluent leaves the exchanger – possibly at a low point drain in piping or separator bottoms.
2. Prepare 75 sample bottles for sample collection.

3. Prepare labels for each sample
4. Install a portable pump for injecting Phenol – Naphtha mixture into suction side of cat reformer feed pump.
5. Prepare 200 litre drum to connect to the portable injection pump.
6. Allow approx. 200 litres of Naphtha for mixing with Phenol.
7. Stopwatch.
8. Prepare protective equipment for personnel who will handle the Phenol (e.g. vapour mask with chemical filter, chemical protective gloves, goggles).

Tracer Preparation.

This concerns missing the Phenol Tracer mixture.

Safety note: Phenol is a classified hazardous material, special care must be taken during tracer mixture preparation. All personnel handling the Phenol & tracer mixture must wear appropriate protective equipment.

Consult the Phenol material safety data sheet for precautions to be employed.

Required Phenol injection rate is 1ppm wt Phenol per 2.4 Tonnes/ day feed (e.g. 750 ppm Phenol for 1800t/d feed). Mixture injection rate is typically 200 litres in 15 min.

Mixture preparation, for the 1800t/d example is:

1. Worm 14.0 kg of Phenol crystals in a hot water or steam bath with temperature set at 50-60^{0}C melt all crystals. This operation should be performed in an equipped chemical laboratory in an appropriate fume cabinet.
2. Carry liquid Phenol in a closed container to the injection point beside the cat reformer feed pump.
3. Dilute the liquid Phenol with hydro-treated naphtha in a 200 litre drum. Total volume of the mixture should be approx. 200 litres (i.e. a full drum). Stir the mixture will a wooden stirrer to obtain a homogenous solution. Tracer injection will be performed with a portable pump drawing from this drum.

Operating Guidelines during the test

As discharge pressure of the portable injection pump is possibly lower than feed pump discharge injection point is at feed pump inlet.

Cot reformer feed rote should be the typical operating rate for the unit to ensure results are representative & correct control of operating conditions.

Monitoring level in feed pump knockout drum is recommended to confirm steady feed rate conditions during the injection.

Tracer injection

1. Ensure cat. Reformer is operating at steady state conditions according to above guidelines.
2. Take one sample of feed & one of effluent at the sample points. This is to give test base line.
3. Commence injection Phenol/Naphtha tracer mixture to feed pump suction side. Control injection rate to 200 litres/15min. continue injecting until the 200-litre drum is empty.

Sample Collection

1. Start the stopwatch as injection commences.
2. For cat reformer feed, collect 1 bottle of sample at times of 8, 10, 12, 15, 20, 25, 30 & 40 minutes. Total of 8 sample sets & 8 bottles required.
3. For cat reformer reactor effluent, collect 2 bottles of samples at times of 8, 10, 12, 14, 16, 18, 20, 22, 24, 26, 28, 30, 32, 34, 36, 38, 40, 42, 44, 46, 48, 50, 55, 65, 70, 80, 90, & 100 minutes. Total of 29 sample sets & 58 bottles required.

Analysis

Quantitatively analyze the samples for Phenol content. Methods which can be used include spectro-photometric & GLC.

Plot the Phenol content by weight against sampling time.

Determine the steady state maximum measured Phenol level in feed & effluent.

The ratio of mass Phenol in Effluent/ moss Phenol in Feed gives the leak rate.

Annexure-IX

INTERNAL ROTARY INSPECTION SYSTEM (IRIS)

Basic Principle

The Internal Rotary Inspection System (IRIS) was originally developed by Shell oil in late 1950 for inspection of Aluminium finned carbon steel Air fin coolers. IRIS is an Immersion type ultrasonic pulse echo technique that can measure the wall thickness of small diameter tubes. A probe is centered within the tube of inspection and ultrasonic pulses are transmitted along a path parallel to the tube axis. A 45 degree acoustic mirror redirects the axial pulse into radial pulse with respect to the tube axis. A rotating arrangement of the mirror through a hydraulic turbine/ electric motor ensures a 360^0 scan of the entire tube section. Echoes reflected back from each metal-water inter-phase are digitized and processed to extract the time of flight & amplitude of the front & back wall echoes. Further processing is applied to calculate the

tube ID, OD and wall thickness. Successive pulses and linear travel of the probe assembly builds up a screen image of the tube cross-section. In real time the data is obtained either as cross sectional thickness display (B-Scan) or surface area thickness map (C-Scan).

IRIS system setup & Calibration

Most critical step in tube inspection is the setting up of the system. The hardware is set to detect the front & back wall echoes for a given tube metallurgy, couplant medium and material velocity Usually the time delay & velocity are adjusted in the A-scan mode to get the ID, OD and wall thickness. The system has provision for monitoring and auto compensation features for changing couplant or material velocity.

The tube inspection is performed at high pulse repetition frequency (PRF) that can program upto 18,000 pulses per second. Typically the turbine can spin upto a rpm of 3600. In order to cover the full circumference of a 1-inch dia. tube with a circumferential resolution of 1.8^0 & an axial resolution of 2.4 inches per second, a pulsing upto 12KHz may be required. The probe centering is critical from the point of view of ensuring a near perfect axial travel of the probe as well as in the accurate measurement of wall losses. This is accomplished by a multiple leg spring loaded pins with wheels that can be replaced for varying diameters of the tube. Typically centering units are available for inspection of tubes ranging from dia. 12mm to 75mm.

The calibration of the IRIS setup is achieved by standardizing with flat bottom holes drilled in tube sample of material matching with the material to be inspected for a pre-selected probe & couplant velocity.

Applications & Capabilities of IRIS

- Corrosion/ Erosion in tubular exchangers comprising of Ferrous, nonferrous or nonmetallic tubes can be inspected within a size range of 12mm to 75mm dia. ID.
- It is also applied to detect internal corrosion and cracking in Boiler water wall tubes.
- In refining industry, one of the well-known applications is the internal inspection of carbon steel-Aluminium finned air coolers. Other techniques such as Remote field eddy current testing fail in this application due to limitations of diffusion of electromagnetic field by Aluminium.
- Through regular inspection, IRIS is the best means of detecting wall losses at an early stage in Coolers & condensers.
- IRIS is a transportable, lightweight system that can be easily mobilized at site.
- It is extremely accurate in its thickness measurement capabilities upto a limit of 0.05mm.
- It has an examination speed of 10-12 tubes per hour.

Limitations of IRIS

- IRIS cannot detect cracks in the tube as such. It requires to be modified with a shear probe in place of a normal probe. Such systems can detect circumferential cracking at the tube sheet and baffle cutting. Shear wave probe IRIS systems cannot operate with conventional data IRIS systems.
- IRIS can miss pinholes & cracks.
- Inspection speeds limited to 3" per second.
- Technique may not always provide 100% coverage of tube due limitations in maintaining water coupling.
- IRIS requires good prior surface cleaning, usually a hydro jet cleaning.
- It has limitations of minimum measurable thickness. Minimum thickness measurable depends on the ultrasonic velocity in the tube material and the Surface roughness of the tube. For Carbon steel tubes, a thickness below 0.035 inches cannot be measured. The thickness limit for new tubes can be as low as 0.025 inches.

Annexure-X

VARIOUS SHELL AND TUBE TYPE OF HEAT EXCHANGER

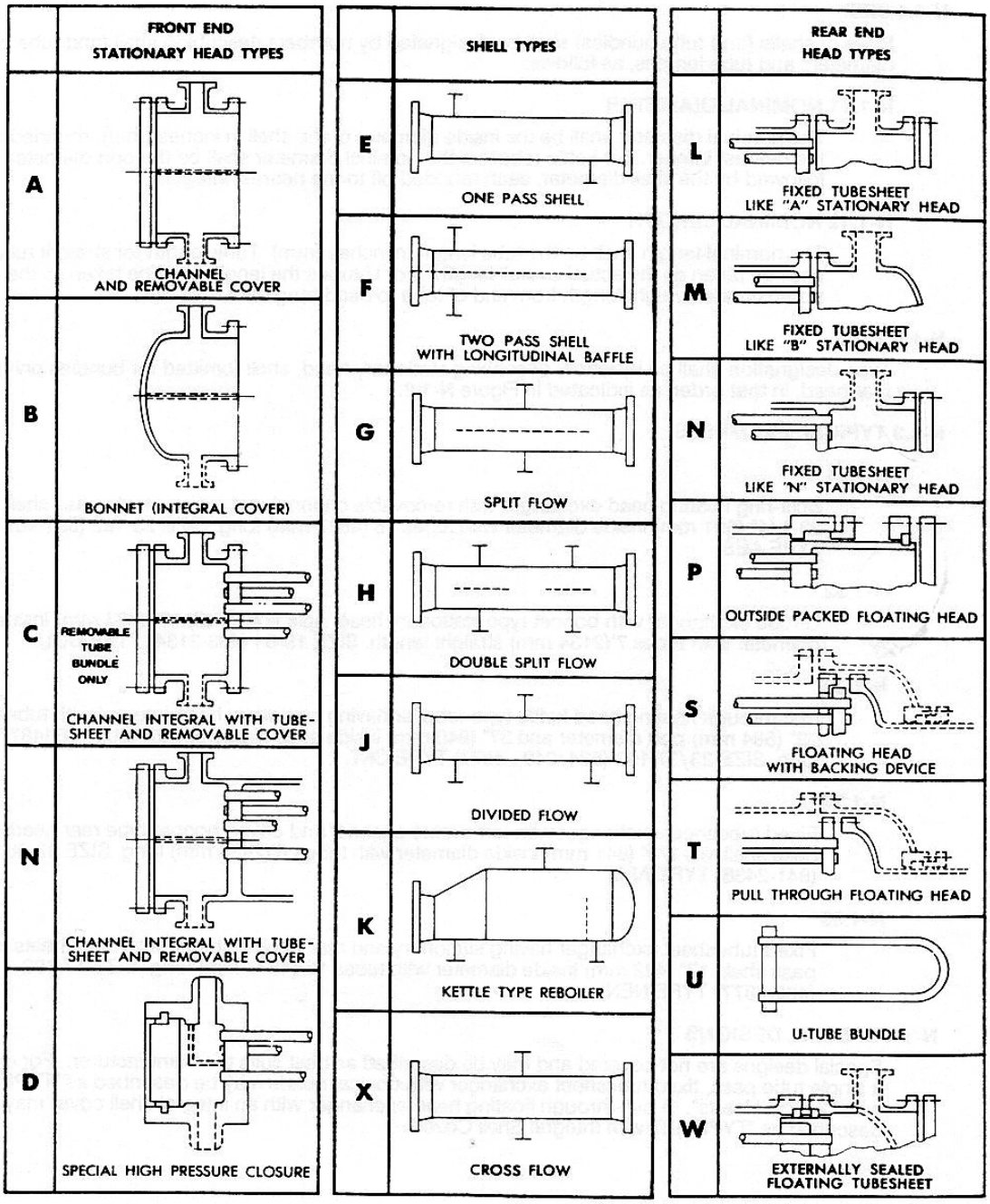

Nomenclature as per Tubular Exchangers Manufacturers Association (TEMA)

Annexure-XI

DETAILS OF HEAT EXCHANGER TUBE PLUGS

Heat exchanger tube plugs seal the ends of leaking tubes, providing longer use of the heat exchanger. The uniform taper and the smooth surface finish assures positive sealing with a minimum installation force.

Sizes

Tube plugs are sized to fit tube diameters from ½" through 1" with standard wall thicknesses of:

- 11 through 14 gauge
- 12 through 17 gauge
- 15 through 20 gauge

Based on Birmingham or Stubs gauge system.

Materials

Tube plugs are to be fabricated from materials as per system compatibility. The common ASTM specifications are as follows:

- Brass – ASTM B16
- Stainless steel – ASTM A479
- Carbon Steel – ASTM A108
- Alloy 600 – ASTM B166
- Alloy R-405 – ASTM B164

Common Plug Dimensions

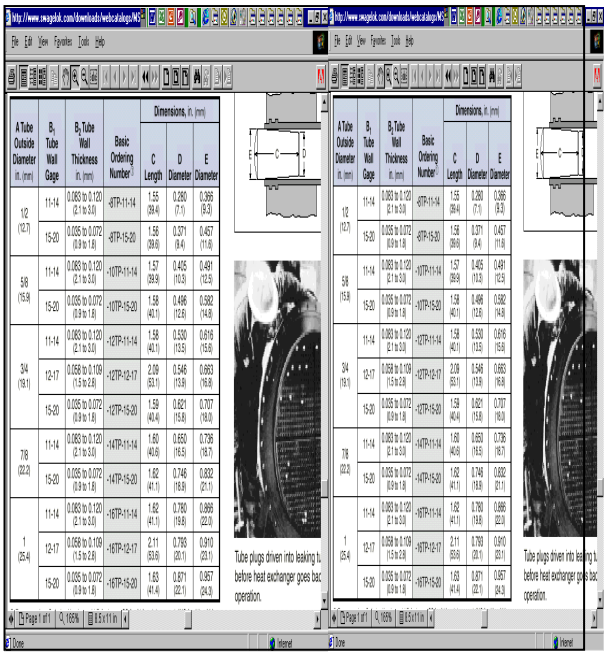

A Tube Outside Diameter in. (mm)	B_1 Tube Wall Gage	B_2 Tube Wall Thickness in. (mm)	Basic Ordering Number	Dimensions, in. (mm) C Length	D Diameter	E Diameter
1/2 (12.7)	11-14	0.083 to 0.120 (2.1 to 3.0)	-8TP-11-14	1.55 (39.4)	0.280 (7.1)	0.365 (9.3)
	15-20	0.035 to 0.072 (0.9 to 1.8)	-8TP-15-20	1.56 (39.6)	0.371 (9.4)	0.457 (11.6)
5/8 (15.9)	11-14	0.083 to 0.120 (2.1 to 3.0)	-10TP-11-14	1.57 (39.9)	0.405 (10.3)	0.491 (12.5)
	15-20	0.035 to 0.072 (0.9 to 1.8)	-10TP-15-20	1.58 (40.1)	0.496 (12.6)	0.582 (14.8)
3/4 (19.1)	11-14	0.083 to 0.120 (2.1 to 3.0)	-12TP-11-14	1.58 (40.1)	0.530 (13.5)	0.616 (15.6)
	12-17	0.058 to 0.109 (1.5 to 2.8)	-12TP-12-17	2.09 (53.1)	0.546 (13.9)	0.663 (16.8)
	15-20	0.035 to 0.072 (0.9 to 1.8)	-12TP-15-20	1.59 (40.4)	0.621 (15.8)	0.707 (18.0)
7/8 (22.2)	11-14	0.083 to 0.120 (2.1 to 3.0)	-14TP-11-14	1.60 (40.6)	0.650 (16.5)	0.736 (18.7)
	15-20	0.035 to 0.072 (0.9 to 1.8)	-14TP-15-20	1.62 (41.1)	0.746 (18.9)	0.832 (21.1)
1 (25.4)	11-14	0.083 to 0.120 (2.1 to 3.0)	-16TP-11-14	1.62 (41.1)	0.760 (19.3)	0.866 (22.0)
	12-17	0.058 to 0.109 (1.5 to 2.8)	-16TP-12-17	2.11 (53.6)	0.765 (20.1)	0.910 (23.1)
	15-20	0.035 to 0.072 (0.9 to 1.8)	-16TP-15-20	1.63 (41.4)	0.871 (22.1)	0.957 (24.3)