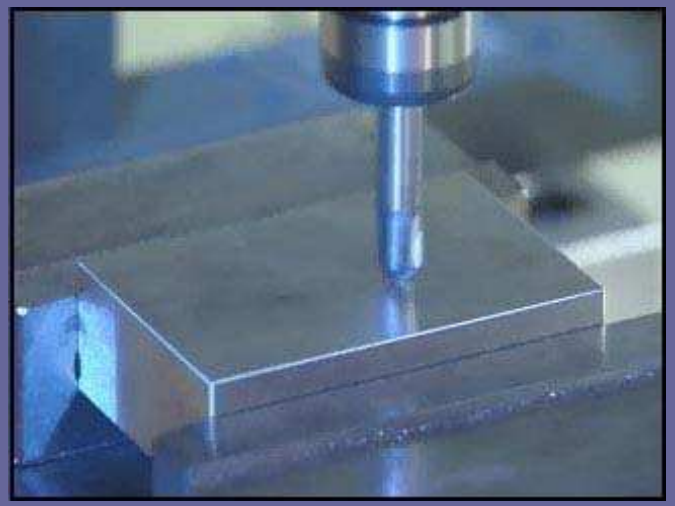

Chapter 2
High Speed Machining

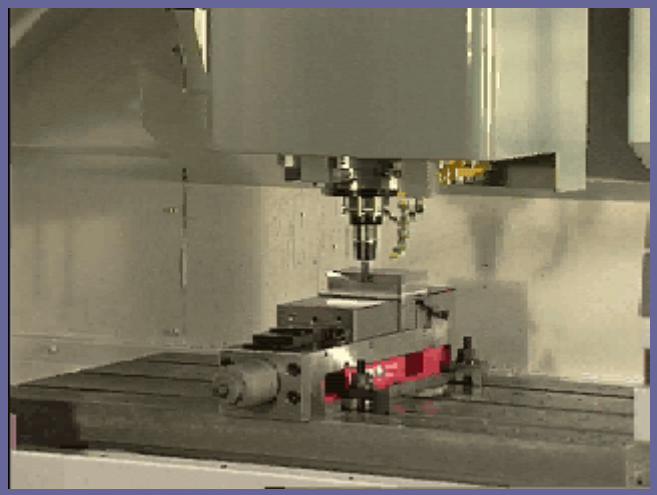

WHAT IS HIGH SPEED MACHINING (HSM)???

Low Speed

High Speed

Defined as the use of higher spindle speeds and axis feed rates to achieve high material removal rates without a degradation of part accuracy or quality

- The most appropriate definition of high speed machining is based on the workpiece material grade or type

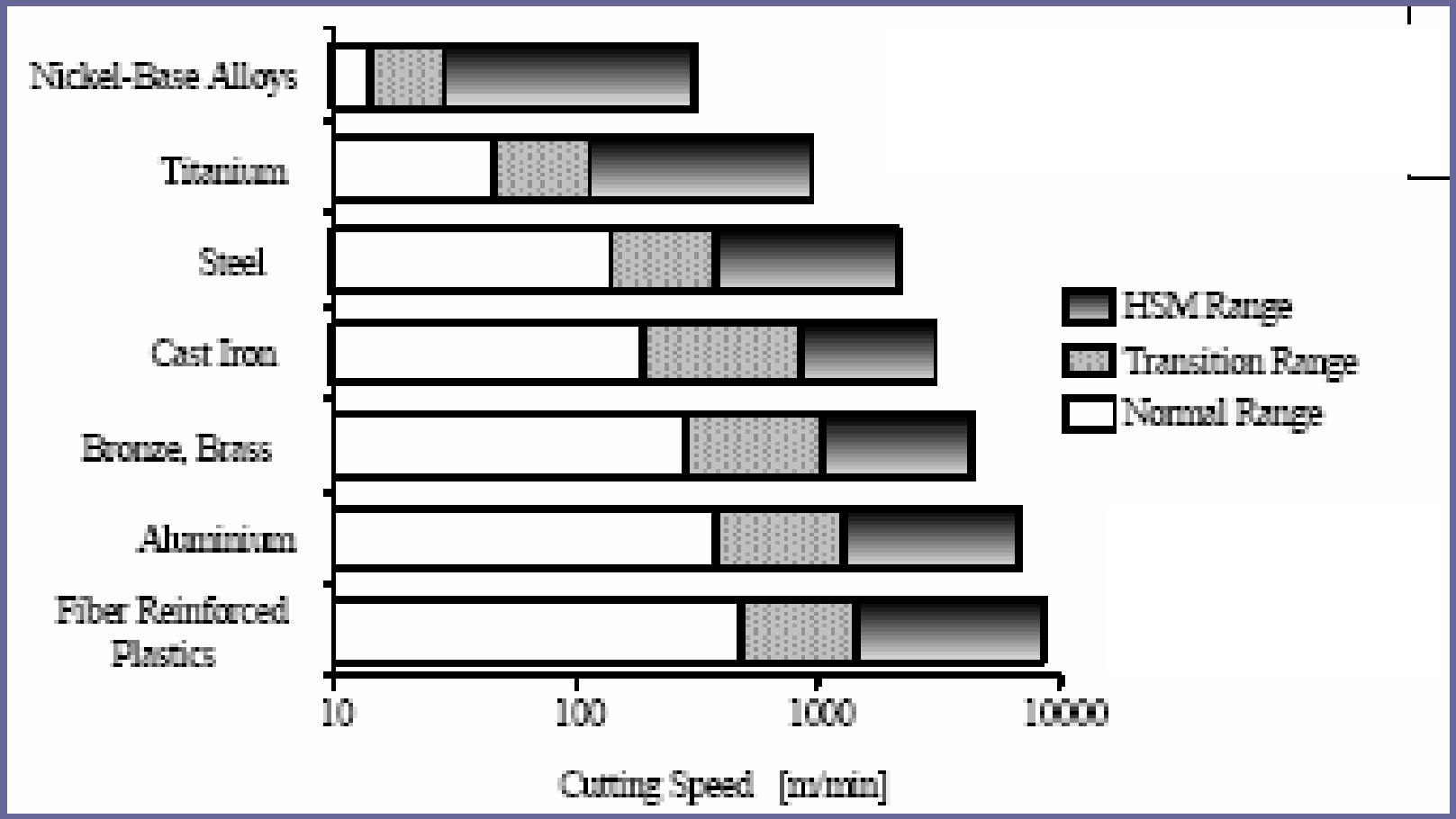

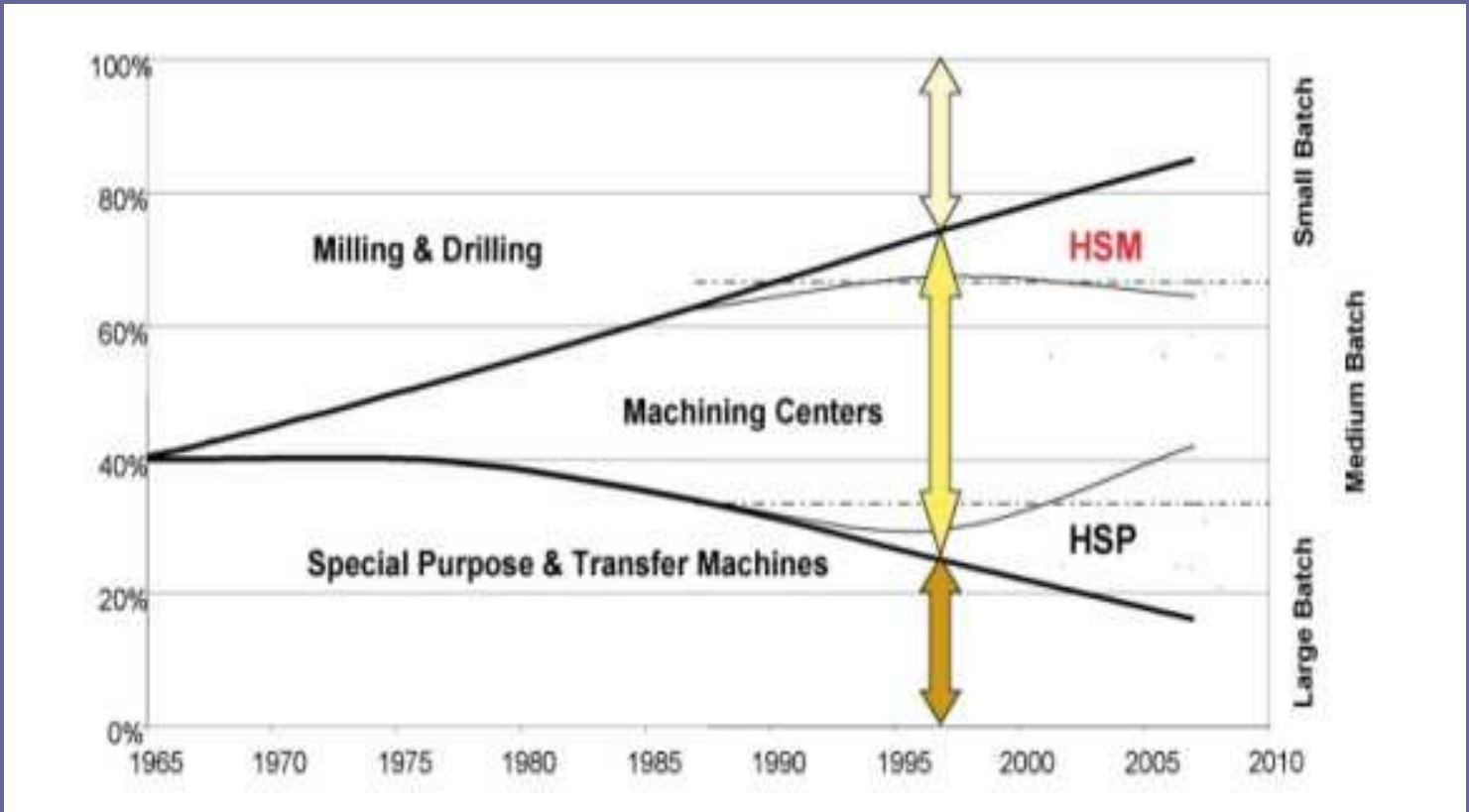

- Today the machining center market constitutes at least 60 percent of the total market,.
- Within this market are high-speed machining centers used in small, medium and large batch production.

Why HSM ?

Management:

- Money: **increased productivity** and efficiency
- To respond to customers demand for **shorter lead times**
- Intense competition with **low labor cost**

Production:

- Through HSM, the machining center can reduce the need for polishing.
- It can deliver EDM electrodes more efficiently.
- It can even eliminate EDM in some cases.
- Produce complex tooling competitively in a single setup.

The smoothness of the machined surface is determined in large part by the height of the cusp between adjacent passes with a ballnose tool.
Take a small step over and cusp height goes down. In this way, lighter depths-of-cut can contribute to drastically reduced polishing time.

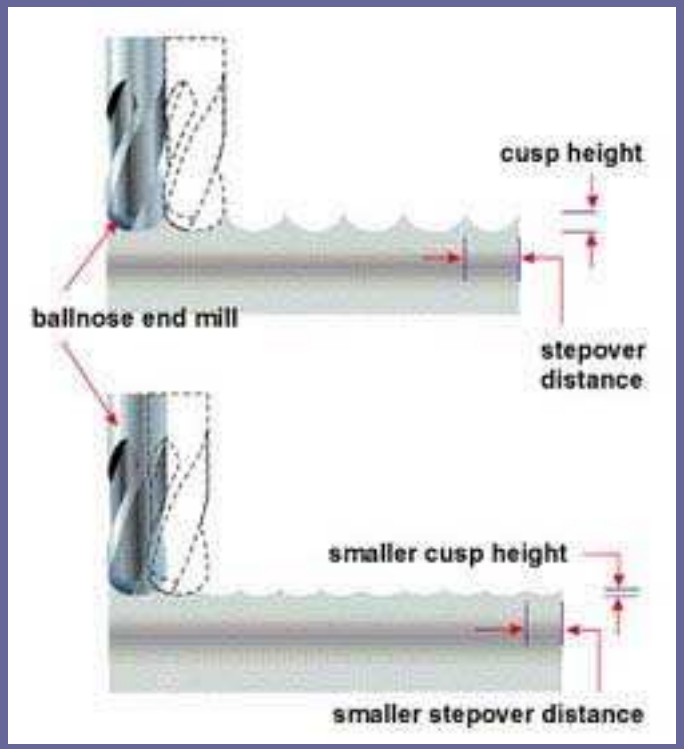

There are two cases in which HSM can let the machining center perform effectively in applications where EDM would typically be used:

- Hard milling
- Milling at high L:D ratios

Hard Milling

- HSM can let milling serve as an alternative to EDM for making dies or molds from the hardest materials (50+ Rc).

HSM allows a forging supplier to produce dies like this one in a single setup on a machining center, where once a combination of milling and EDM was required. HSM produces the die faster. HSM is also more accurate, because fewer steps result in reduced error stacking.

Milling At High L:D Ratios

- The ability to take light cuts quickly makes the machining center more efficient with delicate tools that are very long relative to their diameter. This helps in at least two cases:
    - Milling deep cavities or deep slots
    - Milling fine details with very small tools.

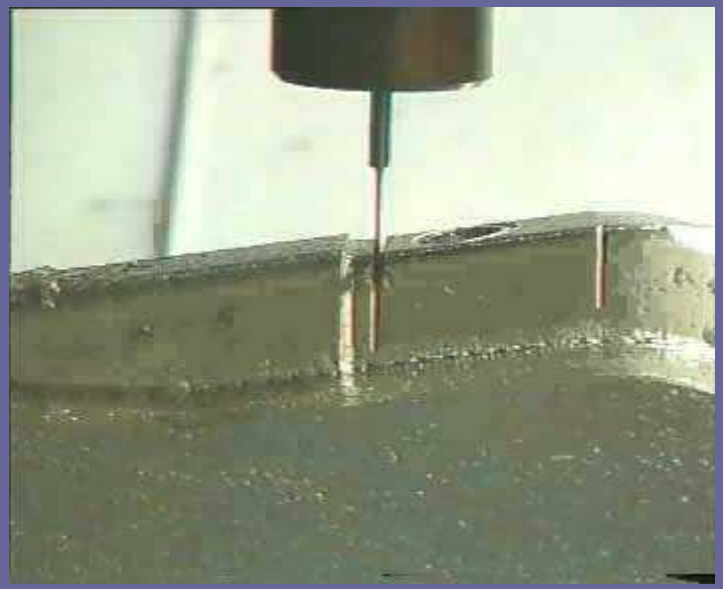

HSM Vs. EDM

- Though HSM expands what milling can do in die/mold machining, EDM still has a role.
- Hardness, geometry, accuracy and finish all determine where HSM and EDM are the most effective.

Machine-Tool Structure

- Materials
- Machine-tool design consideration

MATERIAL

- Gray cast iron:
  - good damping capacity and low cost but very heavy.
  - made from class 40 and class 50 cast iron.
- Welded steel
  - Lighter than cast iron structure.
  - Advantages: available in wide range of sizes and shapes, desirable mechanical properties, good manufacturing characteristic, low cost, high stiffness to weight ratio, low damping capacity

MATERIAL

- Ceramics:
  - High strength, stiffness, corrosion resistance, good surface finish and good thermal stability, low density.
- Composite:
  - Consist of polymer matrix, metal matrix (MMC), ceramic matrix (CMC).
  - Can be tailored to obtain appropriate mechanical properties, suitable for high accuracy and high speed machining.
  - However, it is very expensive and limited in use.

MATERIAL

- Granite-epoxy composites:
  - Consisted of 93% crushed granite and 7% epoxy binder.
  - Good castability (allows design versatility, high stiffness to weight ratio, thermal stability, resistance to environment degradation, good damping capacity.
- Polymer concrete:
  - Mixure of crushed concrete and plastic (polymethylmethacrylate).

MATERIAL

- Can be cast into desired shape and design, good damping capacity, can be used for sandwich construction with cast iron thus improving the mechanical properties.
- Low stiffness (about one-third of class 40 cast iron), poor thermal conductivity.

- A popular method of frame construction for HSM is the bridge-type construction, a modified bridge construction or an overhead gantry system as compared to C-frame by conventional machining center.
- The bridge design provides an optimal distribution of the moving masses and the spindle is rigidly mounted close to the guideways.

- A new type of construction so called bridge design in polymer concrete becoming increasingly popular for high-speed machining centers.
- Advantages:
  - provides excellent accessibility to the working area from the front for an operator.
  - The large opening allows good access for a pallet changer or robot.
  - The pyramid-shaped construction with three-point support provides a stiff stationary structure to absorb the high acceleration/deceleration forces of the moving slides.
  - provides six to 10 times better vibration dampening than cast iron.
  - offers superior thermal stability, as the thermal conductivity of polymer concrete is 1/20 that of cast iron.
  - Overall, the results are better tool life, better accuracy and surface quality, plus noise reduction.

Machine-Tool Structure and Guideways

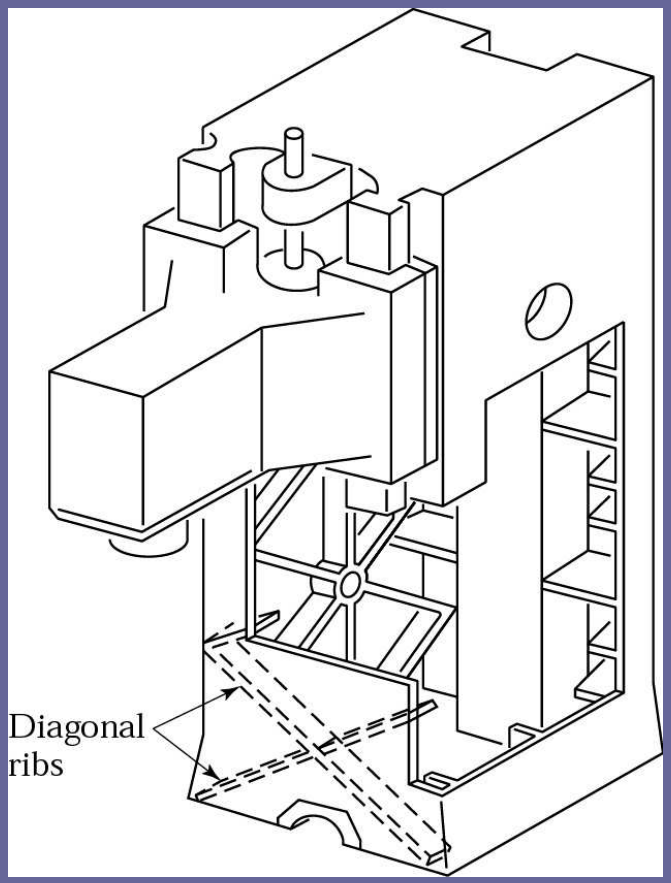

An example of a machine-tool structure. The box-type, one-piece design with internal diagonal ribs significantly improves the stiffness of the machine..

Steel guideways integrally-cast on top of the cast-iron bed of a machining center. Because of its higher elastic modulus, the steel provides higher stiffness than cast iron.

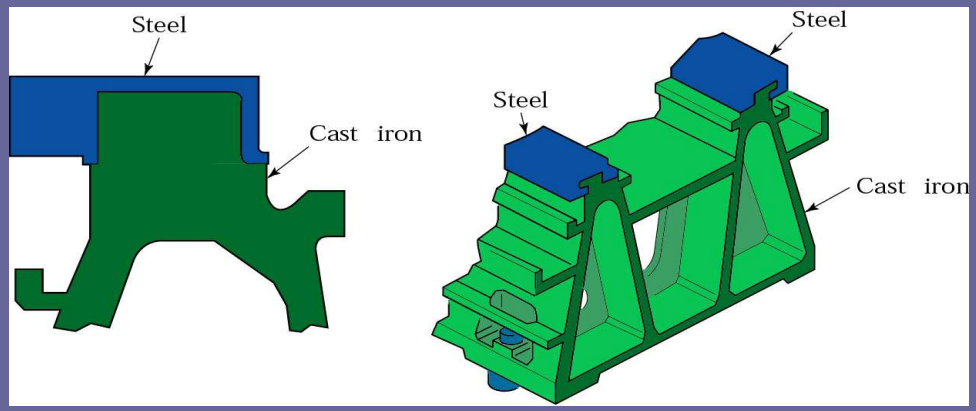

New monoblock bridge design in polymer concrete.

Assembled machine with integrated pallet changer.

Machine-tool design consideration

- Important consideration factors:
  - Design, materials and construction
  - Spindle technology and tool holder
  - Thermal distortion of machine components
  - Error compensation and the motion control of moving components along slideways.

Design, materials and construction

- Appropriate <u>material selection, good design and construction</u> are essential especially in high precision machining and high speed machining.
- Role of machine structure is to provide stiffness and, accuracy, thermal stability,good damping, adequate work volume and ease operator access.

Design, materials and construction (con't)

- Machine stiffness:
  - Major factor in the dimensional accuracy of a machine tool.
  - It is a function of:
    - Elastic modulus of the materials used
    - Geometry of the structural components including spindle, bearing, drive train, slideways.
  - Can be enhanced by design improvement bu using diagonally arrange interior ribs.

Static stiffness

- Measured in unit of N/mm
- Measured the resistance of a body to deflection under load.
- Simple example is the embodiment of static stiffness is a linear spring.
- Stiffness of machine tool structure is closely related to machine tool capability, will affects the accuracy and the extent to which the machine can support high feed rates and accelerations.

- Closed loop static stiffness for the Z axis is determined using a load cell to measure the force applied when a specified axis move is commanded.
- Distance between the spindle nose and table top is measured to determine overall deflection of the machine.

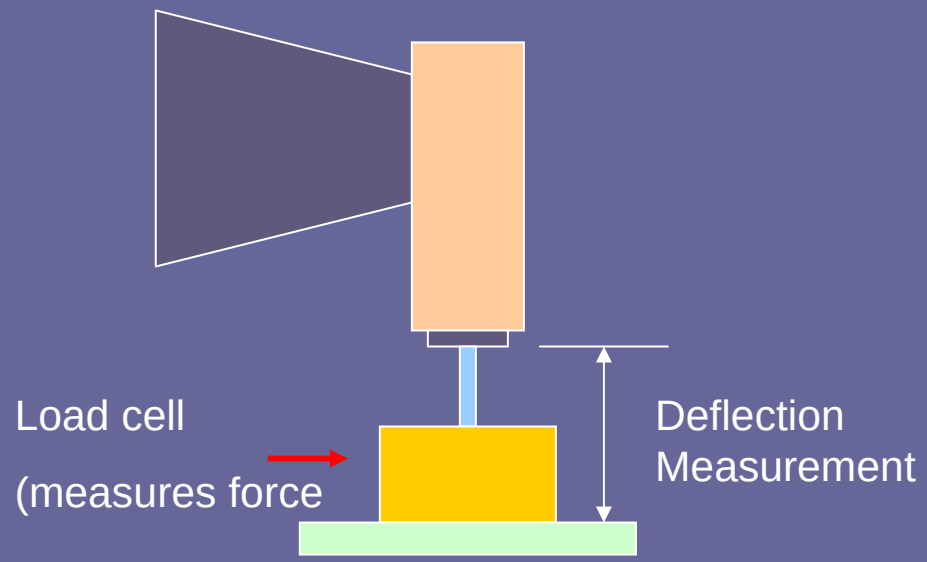

- Open loop static stiffness of the Z axis is measured by applying a known force to the Z axis spindle and measuring its deflection.
- Only the stiffness of the drive train, slide and column is measured.

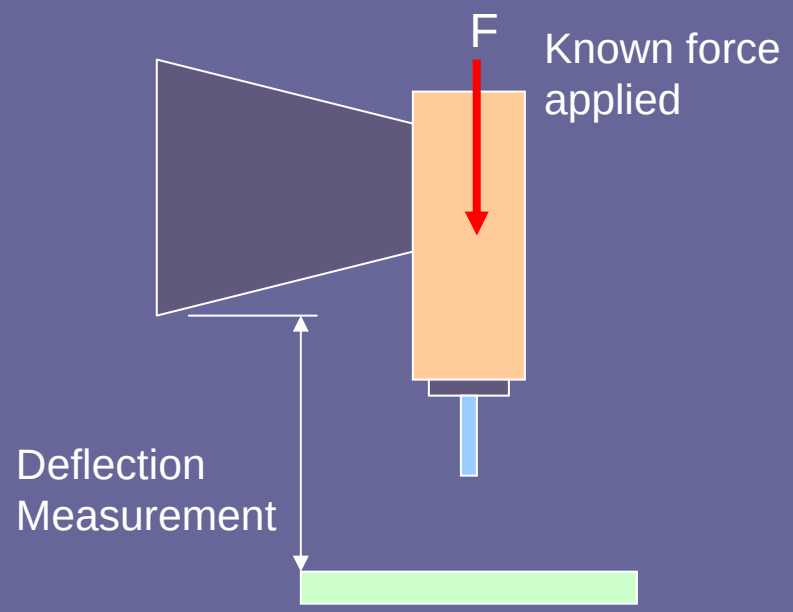

Dynamic stiffness

- Lower than static stiffness and varies infrequency.
- Resonant frequency is a frequency at which vibration is not adequately damped, thereby affecting controllability of the system, surface finish and accuracy.

Design, materials and construction (con't)

- Damping:
  - Very critical factor in reducing or eliminating vibration and chatter in machining operations.
  - Involves:
    - Type of materials used
    - Type of joints
    - Number of joints (welded, bolted)
  - Greater the number of joints the more the damping.
  - Well damped machine tools provide better surface finish and support high accelerations and feed rates because more control algorithms can be used.

Internal Damping of Structural Materials

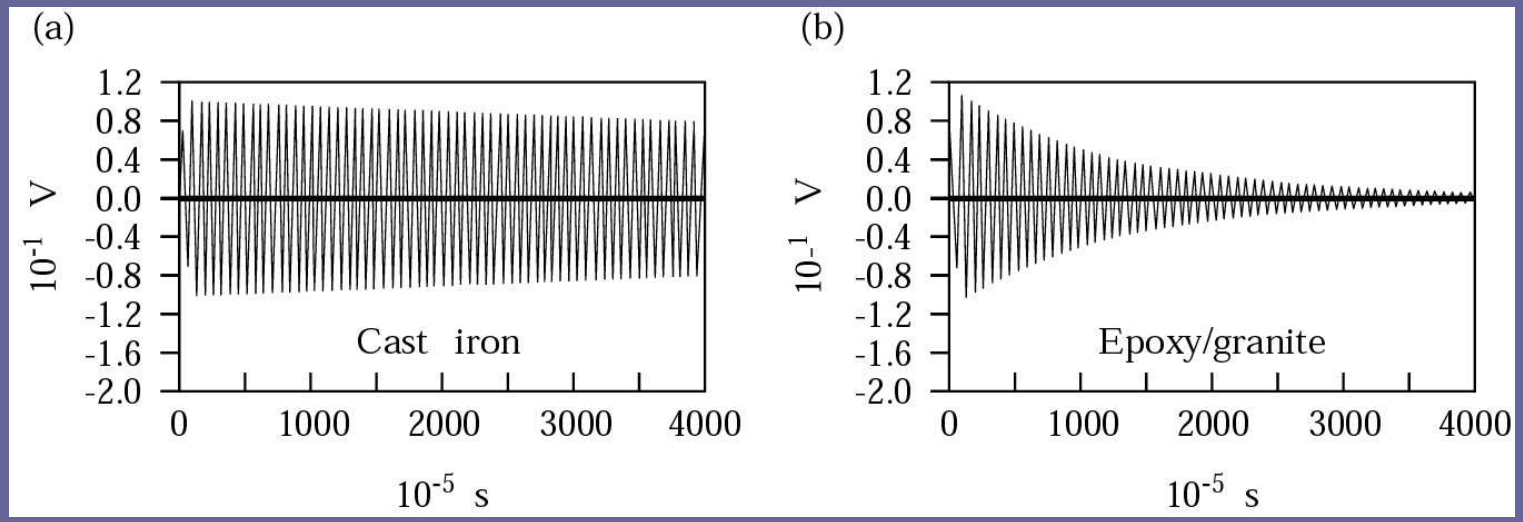

The relative damping capacity of (a) gray cast iron and (b) epoxy-granite composite material. The vertical scale is the amplitude of vibration and the horizontal scale is time.

Joints in Machine-Tool Structures

The damping of vibrations as a function of the number of components on a lathe. Joints dissipate energy; the greater the number of joints, the higher the damping capacity of the machine.

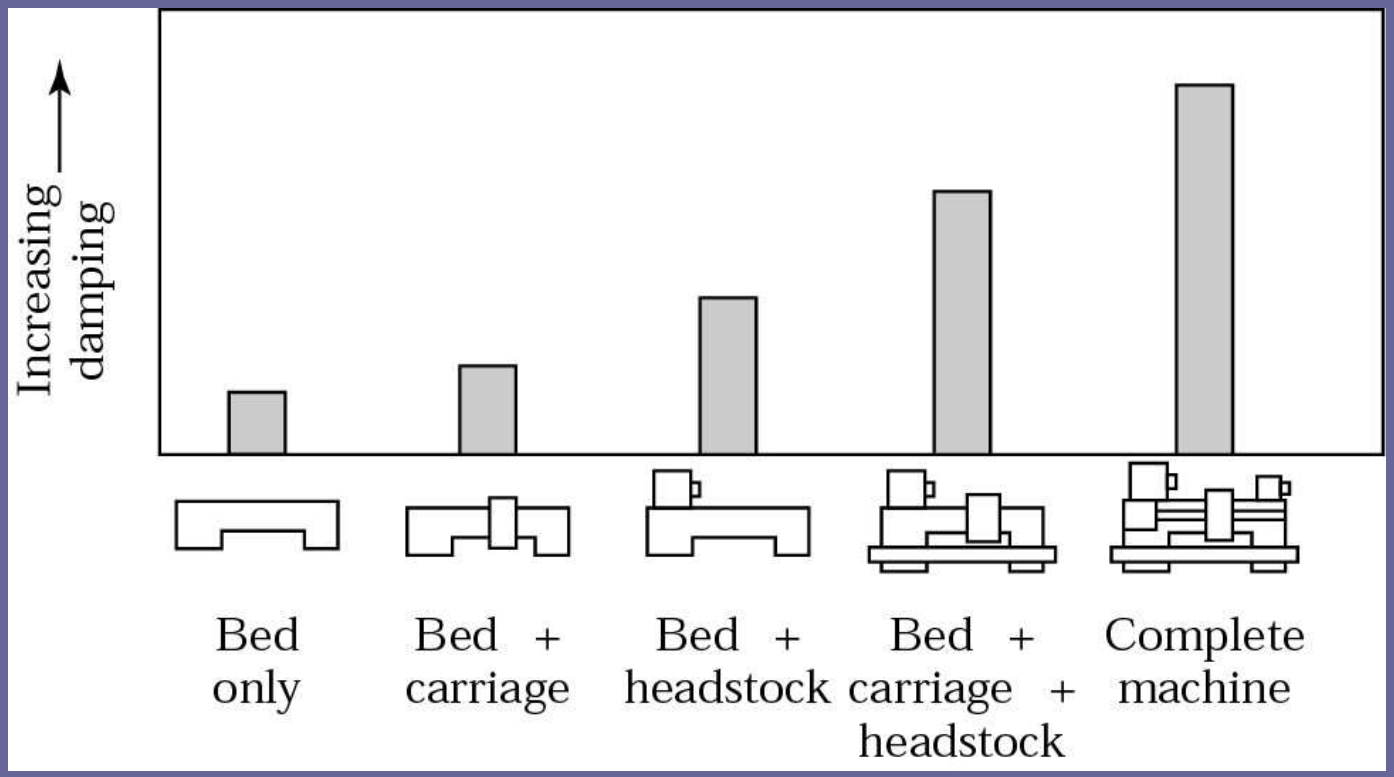

Spindle Technology

- High speed spindle design must provide required performance features include:
  - Desired spindle power
  - Max spindle load, axial and radial
  - Max spindle speed allowed
  - tooling style, size and capacity for ATC
  - Belt driven or integral motor-spindle design

Major design components required:

1) Spindle style:

a) Belt driven

- Assembly consists of spindle shaft, held with bearing system and supported by the spindle housing.
- Spindle shaft incorporates the tooling system including the tool taper, drawbar mechanism and tool release system.
- Motor is mounted adjacent to the spindle and the torque is transmitted to the spindle by cogged or V-belt.

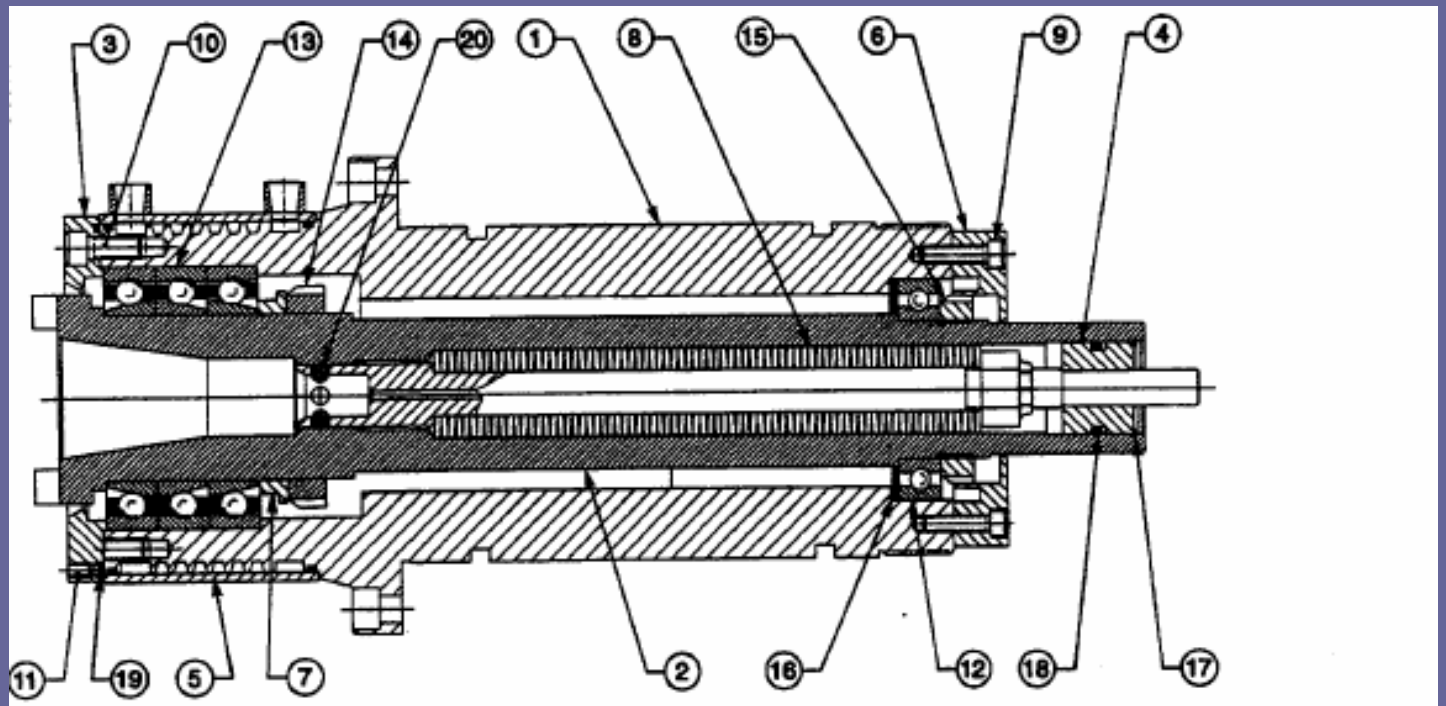

Belt Driven

Spindle Design: 8,000 - 10,000 RPM, CAT 40

Major design components required (con't):

- Advantages of belt driven:
  - Reasonable cost
  - Wide variety of spindle characteristic
  - High power and torque possible
- Limitations:
  - Max speed is limited
  - Belt utilize bearing load capacity

Major design components required (con't):

b) Integral motor –spindle design

- Does not rely upon the external motor to provide torque and power.
- Include an integral part of the spindle shaft and housing assy which higher spindle speed rotation.
- Comprised of spindle shaft, including motor element and tooling system.
- Spindle shaft is held in position by a set of precision bearings.

Major design components required (con't):

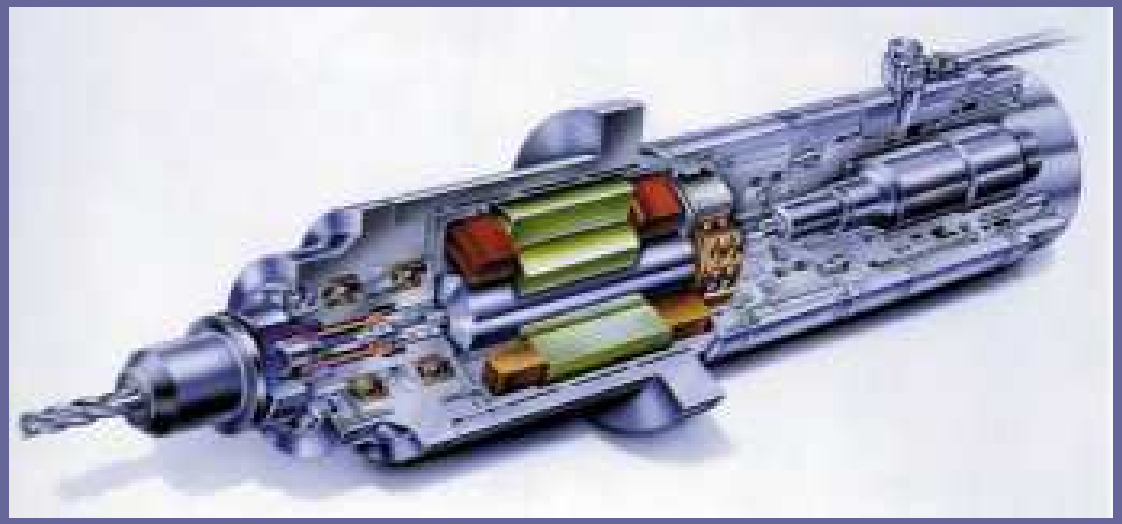

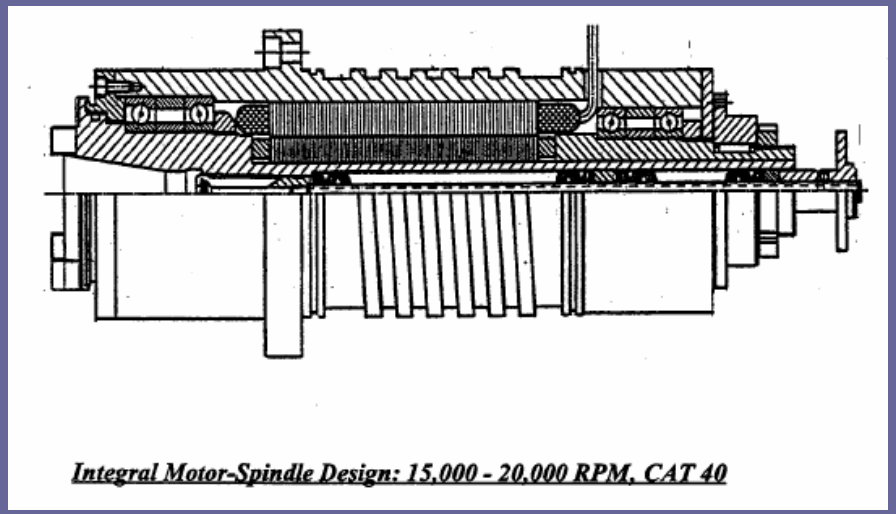

Major design components required (con't):

2) Spindle bearings

- Bearing type must be fulfill these requirements:
  - High rotational speed
  - transfer torque and power to the cutting tool
  - capable to reasonable loading and life.

Major design components required (con't):

Requirement	Best Bearing Type	Design Impact
High Speed	Small Angular Contact	Small Shaft, Low Power
High Stiffness	Large Roller	Low Speed, Large Shaft
Axial Loading	High Contact Angle	Lower Speed
Radial Loading	Low Contact Angle	Higher Speed
High Accuracy	ABEC 9, High Preload	Expensive, Low Speed

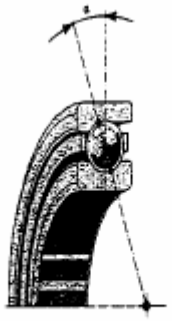

(Figure 3) Contact Angle

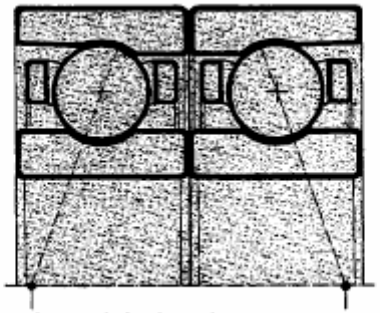

Back to Back / DB / O Configuration Bearing Mounting

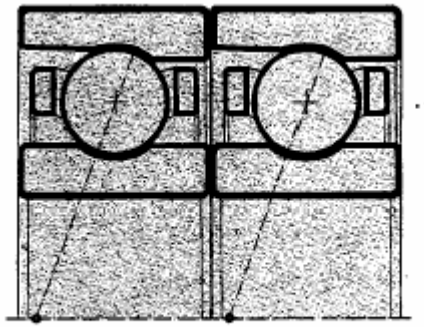

Tandem / DT Configuration Bearing Mounting

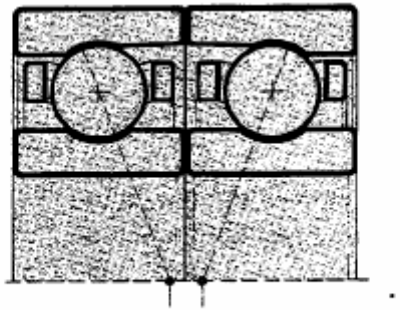

Face to Face / DF X Configuration Bearing Mounting

Major design components required (con't):

3) Spindle motor design

- Most common used is an AC induction motor.
- Rotor is attached to the spindle shaft with thermal or adhesive clamping.

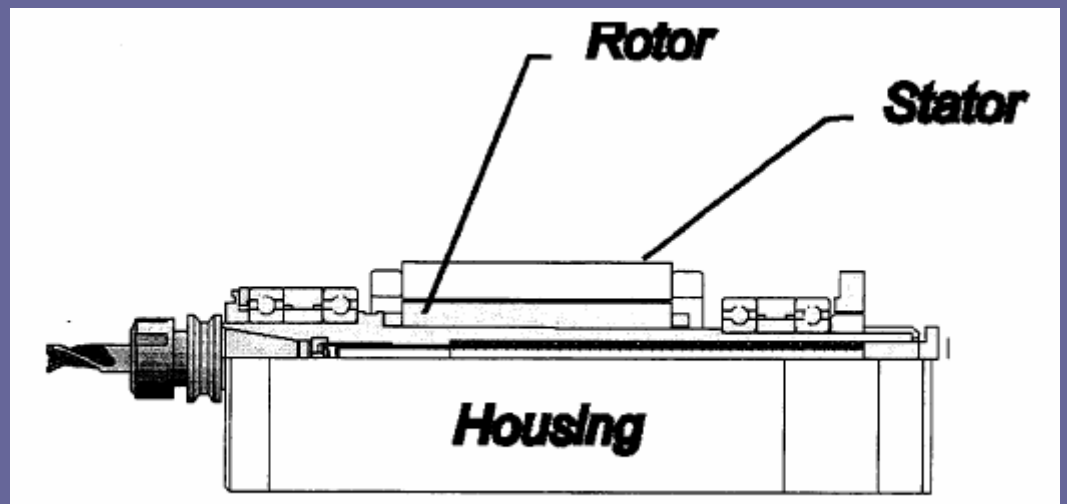

Spindle Motor Rotor and Stator Set

Major design components required (con't):

4) Spindle shaft

- The bearings are mounted to the front and rear of the shaft and the shaft is then fitted into the spindle housing.
- Spindle shaft must capable to transfer the power from the motor to the cutting tool avoid from bending.

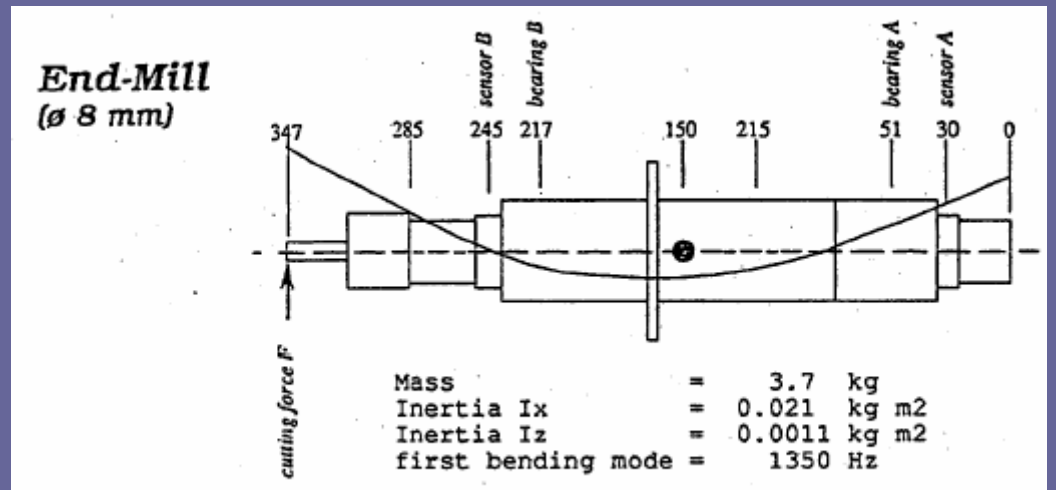

Bending Mode Analysis for Spindle Shaft (Courtesy IBAG Zurich)

Major design components required (con't):

5) Spindle housing

- Spindle housing shaft and motor for HSM is held in a cartridge type housing.
- Primary function:
  - Locate the bearings
  - Provide the lubrication, air seal, cooling water or oil.

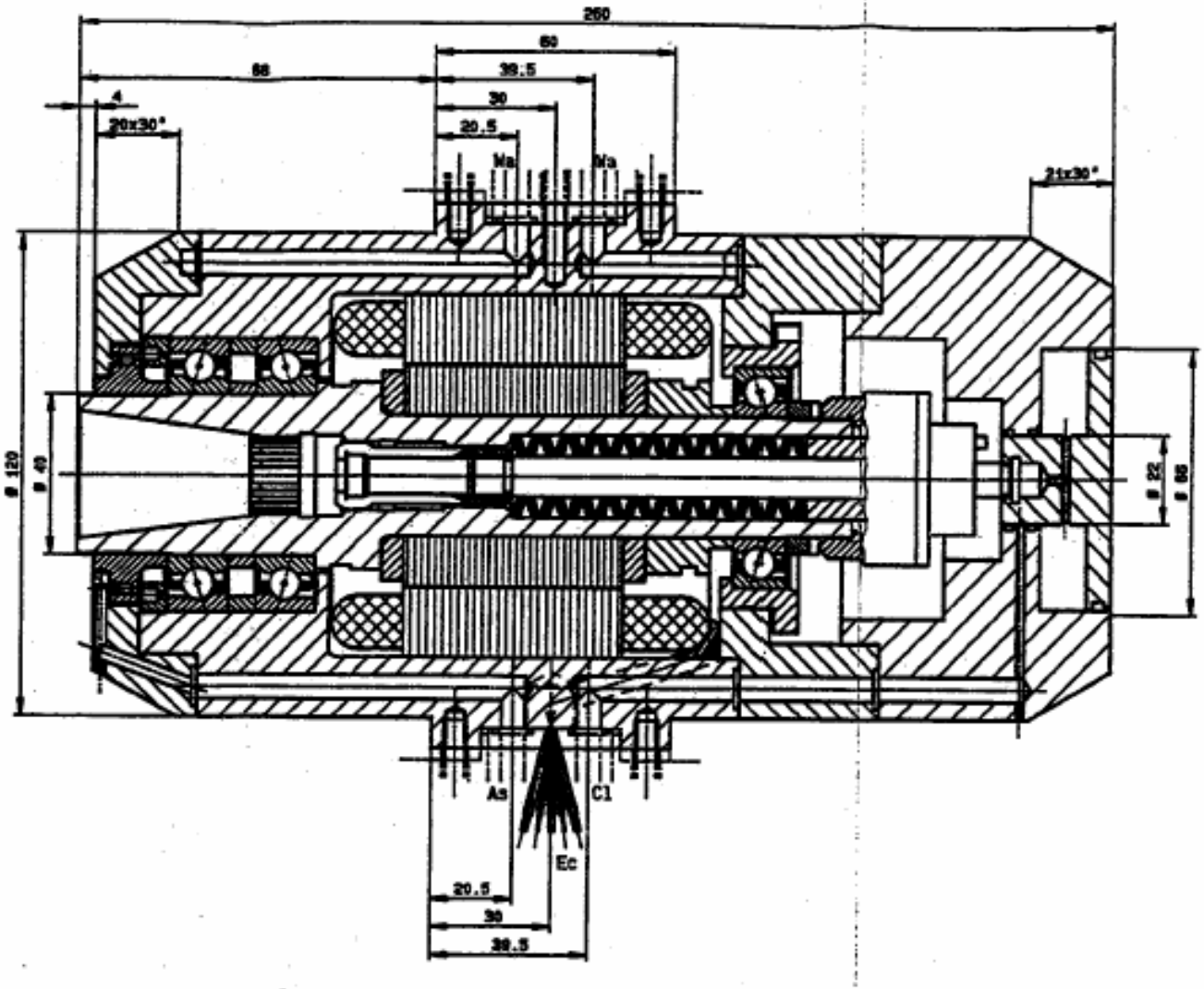

Complex High Speed 5 Axis Spindle Housing

Tool holder

- Common type: BT40, CAT 40 and ISO 30
- CAT 40 up to 20,000 rpm
- At higher speeds, spindle taper expands more than cutting tool causing:
  - Axial position changes
  - Tool may bind in spindle
- Current trend: HSK (Hollow Shank Taper) tool holder
  - German DIN69893 & DIN69063
  - Better axial positioning
  - Will not bind in spindle
  - Faster tool change
  - Shorter length
  - Lower mass
  - Require more attention to cleanliness


HSK
D
~L/2
L
D
(CAT, SK, BT)

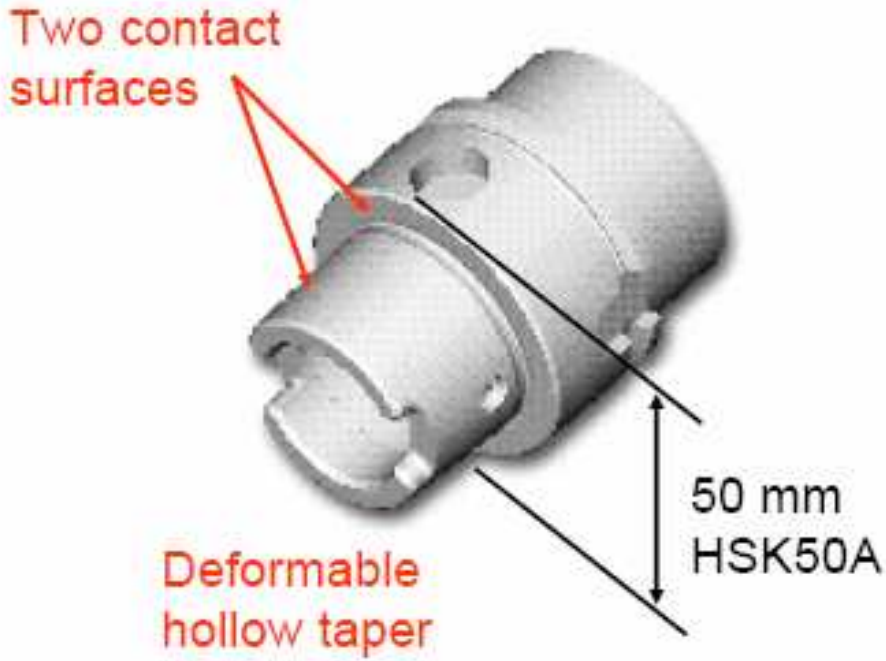

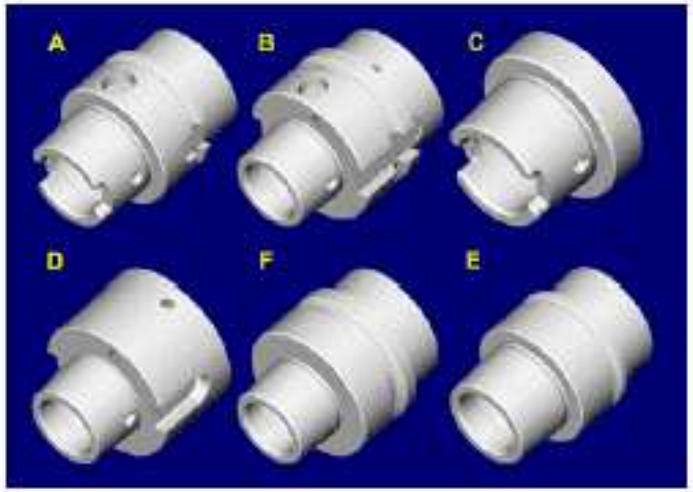

A,C - general purpose
B,D - high torque
E,F - high speed
C,D - manual tool change

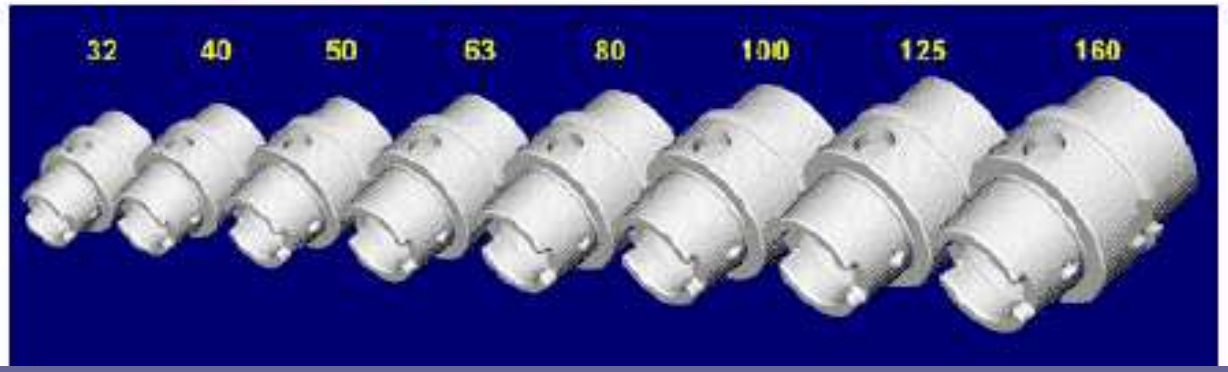

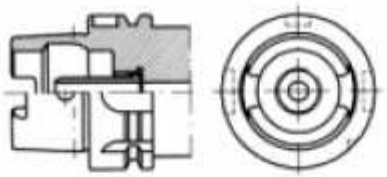

HSK Form A

HSK Form A is the most commonly used HSK taper. It is designed for automatic tool change and has tool orientation features on the flange.

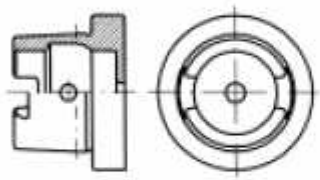

HSK Form C

HSK Form C is designed for manual tool change and is frequently used with tool extensions, short spindles, and on transfer lines.

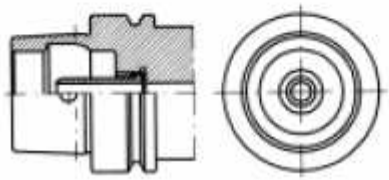

HSK Form E

HSK Form E is designed for automatic tool change. With the elimination of drive keys and tool orientation features, Form E is easy to balance and is ideal for very high speed machining.

Thermal distortion

- 50% of machine-tool errors and accuracy are due to temperature.
- Methods of heat transfer:
  - Conduction
  - Convection
  - Radiation
- Source:
  - Internal: from bearing, ballscrew, machine ways, spindle motor, pumps etc
  - External: cutting fluid, sunlight, ambient temperature etc

- Solutions:
  - Thermal and geometric real-time error compensating features was implemented for accurate ballscrew positions.
  - Gas or fluid hydrostatic spindle bearings.
  - New design for traction or friction drives for linear motion.
  - Extremely fine feed and position controls using microactuators
  - Fluid circulation channels in the machine-tool base for the maintenance of thermal stability.

- There are two modes in high speed machining:

Mode	I	II
Characteristic	**High** cutting speed, **low** axial depth of cut (<0.5 mm), radial depth of cut and feed per tooth (<0.3 mm) is controlled by **surface roughness**, tool diameter is usually < 8 mm.	**Low** cutting speed, **high** axial and radial depth of cut, feed per tooth is usually **small**, tool diameter is usually > 10 mm.
Application	**Finishing operations**, high surface area generation rate.	**Roughing operations**, high volumetric material removal rate.
Machine tool requirements	60,000 rpm spindle speed, 2-3 kW power.	Up to 10,000 rpm spindle speed, ~20-30 kW power.
Benefits	Reduce or eliminate **polishing and deburring process**	Reduce cycle time during **roughing process**

- The maximum cutting speed that can be employed is dependent on the thermal mechanical properties of the workpiece material.

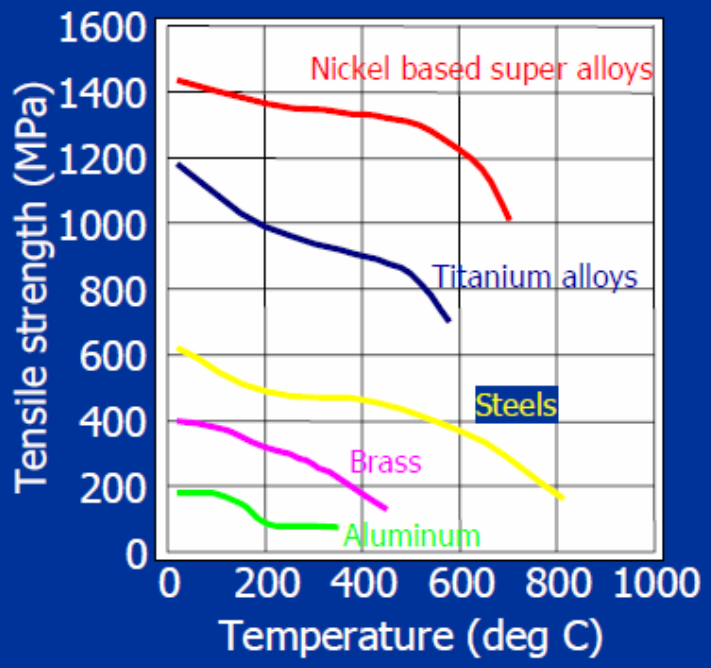

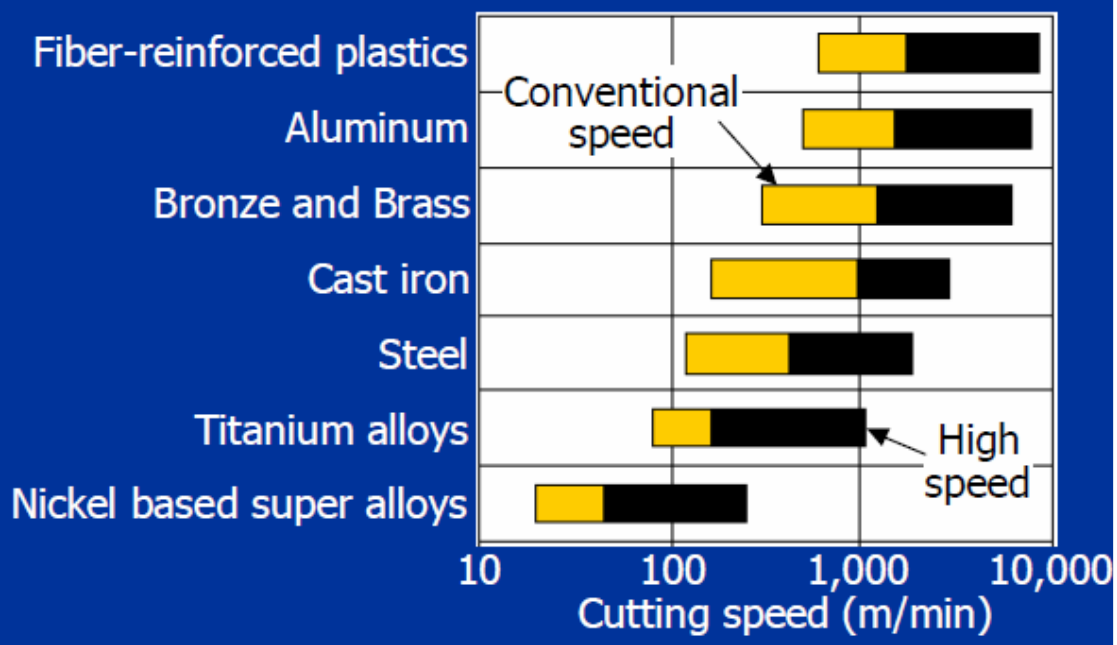

Tool Material Considerations in HSM

- Tool materials with high hot hardness and fracture toughness are usually employed for HSM.
- Coated tungsten carbide (micro grain size) is currently the dominating tool material used for HSM, especially for flank and ball nose end milling of hardened steels.

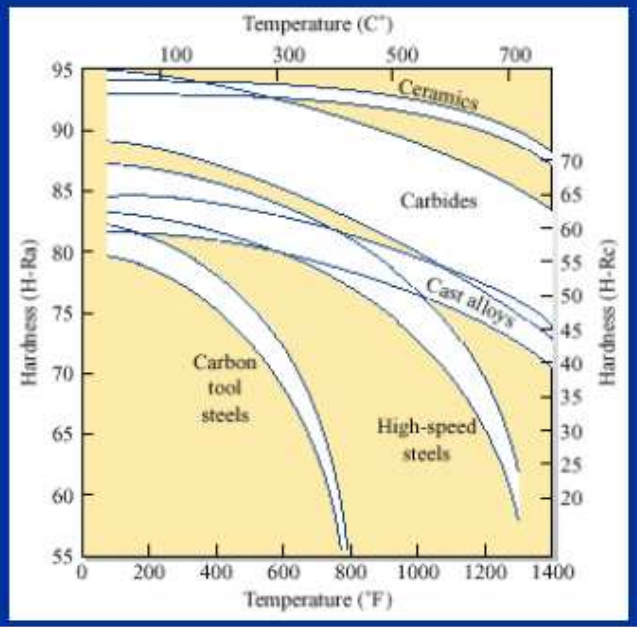

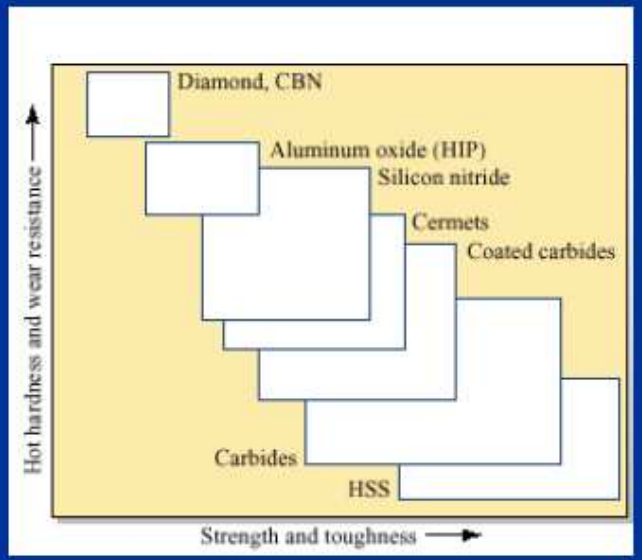

Tool Material Considerations in HSM

- TiAlN or AlTiN coatings, able to withstand high temperature generated in the tool are employed during HSM.

Product name	Material	Hardness (HV)	Friction coefficient with steel	Max. operating temperature (deg C)	Structure
BALINIT ALCRONA	AlCrN	3,200	0.35	1,100	Monolayer
BALINIT B	TiCN	3,000	0.40	300	Multilayer gradient
BALINIT X.TREME	TiAlN	3,500	0.40	800	Monolayer
BALINIT X.CEED	TiAlN	3,300	0.40	900	Monolayer
BALINIT FUTURA	TiAlN	3,300	0.30 - 0.35	900	Nano
BALINIT HARDLUBE	TiAlN+ WC/C	3,000	0.15 – 0.20	800	Multilayer lamellar

Mono layer

Multi-layer gradient

Multi-layer lamellar


Nano

[Balzers, 2004]

Machine Tool and Controller Considerations

- Spindle speed : 20,000 to 60,000 rpm
- Spindle power : up to 22 kW
- Programmable feed rate : up to 60 m/min
- High spindle rigidity and thermal stability
- Axis acceleration : 1 to 1.5 G
- Linear increments : 5 to 15 µm
- Look ahead function in the CNC
- Data flow up to 250 Kbit/s
- High block processing frequency up to 1 kHz
- Non Uniform Rational B-Spline (NURBS) interpolation
- Temperature error compensation

Advantages and Drawbacks of HSM

Advantages	Drawbacks
• Low surface roughness can be achieved, reducing polishing time by as much as **60 – 100%** • Capable of machining hot work or cold work die steel of up to **62 HRc** without annealing • Capable of machining **thin walls** • **Reduced** pre- and post HSM processes such as hardening, electrode milling and EDM • Capable of machining **small die features** (down to 0.5 mm) • **Part design can be changed very quickly** as there is no need to produce electrodes	• **High** capital investment and maintenance costs • Tool holder system **must be balance to G1 specification** at rotational speeds >10,000 rpm • **Precision** tool holders are required • **High wear** on guide ways and ball screws due to high acceleration and deceleration rates • **Considerable time** is required for trial and error when technical knowledge of HSM is limited (i.e. cutter path, workpiece and tool interaction, chatter)

Mechanics of Chip Formation During HSM

- Effect of Workpiece Hardness and Cutting Speed on Chip Formation

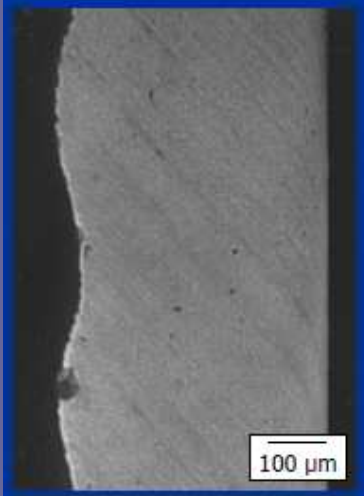

Workpiece
AISI H13
Hardness
28 HRC
Tool material
AMB 90™
Cutting speed
75 m min^{-1}
Chip type
Continuous

Workpiece
AISI H13
Hardness
49 HRC
Tool material
AMB 90™
Cutting speed
75 m min^{-1}
Chip type
Segmental

Workpiece
AISI H13
Hardness
28 HRC
Tool material
AMB 90™
Cutting speed
200 m min^{-1}
Chip type
Segmental

Workpiece
AISI H13
Hardness
49 HRC
Tool material
AMB 90™
Cutting speed
200 m min^{-1}
Chip type
Shear localised

- When machining hardened AISI H13 hot work die steel, the type of chip formed is dependent on **workpiece hardness and cutting speed**.
- Modelling the **right type of chip** formed is critical as the orientation of the shear angle affects the stress field generated in the workpiece which determine the **residual stress, temperature generation and strain distribution.**

Mechanics of Chip Formation During HSM

- Results on Chip Formation

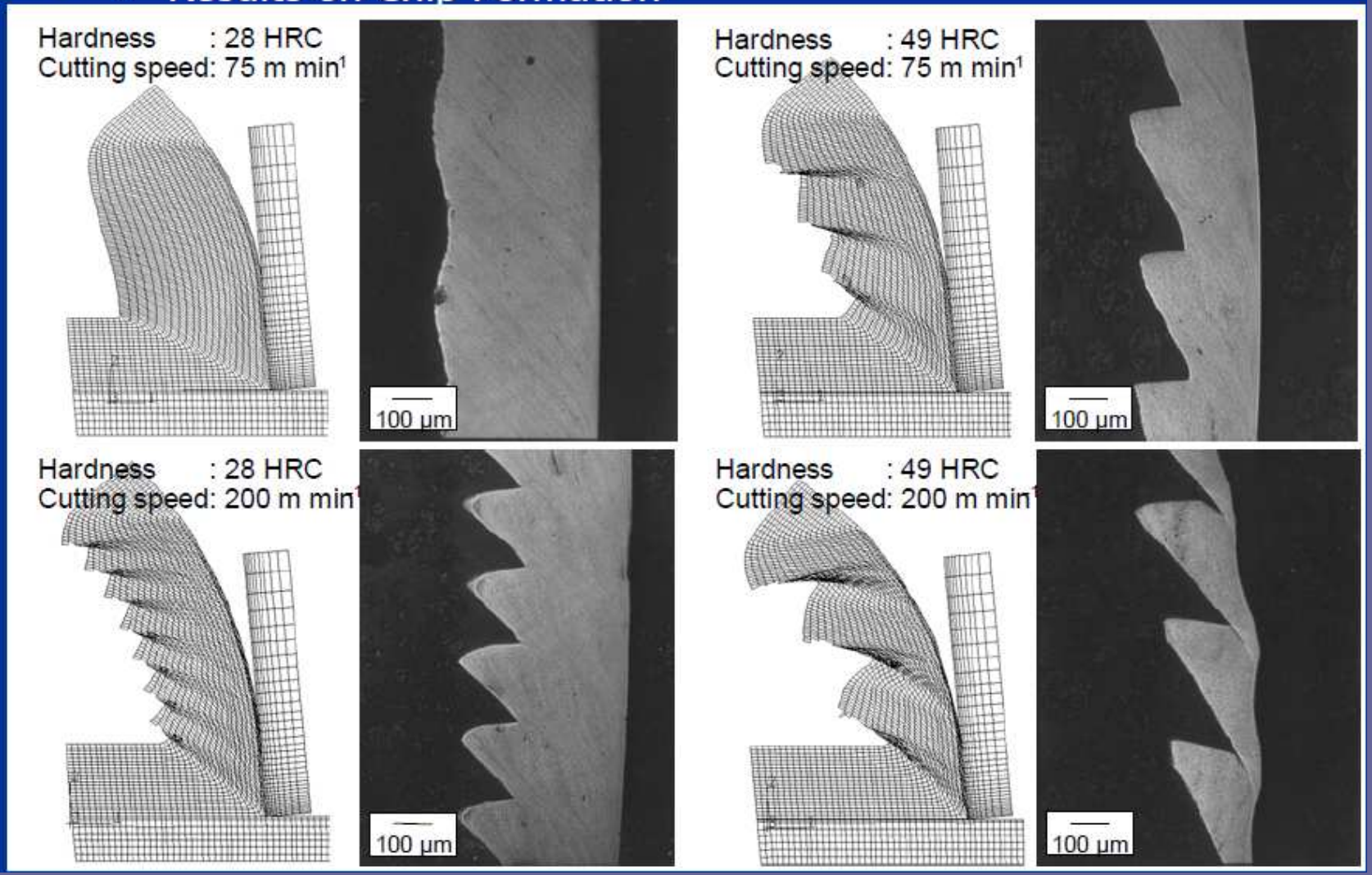

Ultra High Speed Milling of Al-Si-Cu Casting Alloys

- Effect of cutting environment

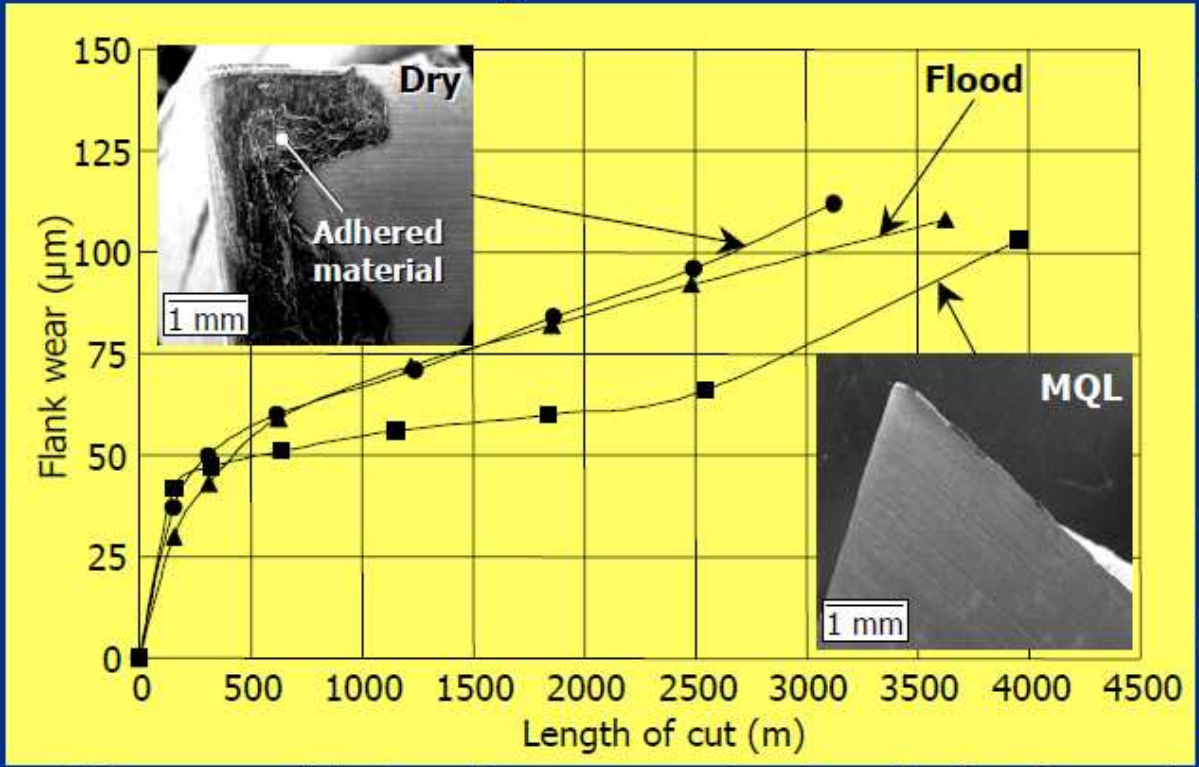

Face milling parameters

Cutting speed	: 5,000 m min^{-1}
	: 300 km hr^{-1}
Spindle speed	: 9,947 rev min^{-1}
Feed/ tooth	: 0.2 mm
Feed rate	: 7,958 mm min^{-1}
Axial depth of cut	: 2 mm
Radial depth of cut	: 91.44 mm

Insert

Material	: Micrograin carbide (Uncoated)
Carbide grain size	: 0.8 µm
Radial rake angle	: +18 deg
Axial rake angle	: +10 deg
Clearance angle	: 11 deg
Nose radius	: 0.8 mm
Edge radius	: 20-30 µm

- When machining dry, a massive level of adhered workpiece material was observed on the flank face of the tool.
- This was not observed under Minimum Quantity Lubricant (MQL) or flood cutting environments.


Cylinder Block
Cycle time: 3 hrs 54 mins


Cylinder Head
Cycle time: 3 hrs 53 mins


9 Axis
itasking Machine
Mazak
INTEGREX 200-IIIST

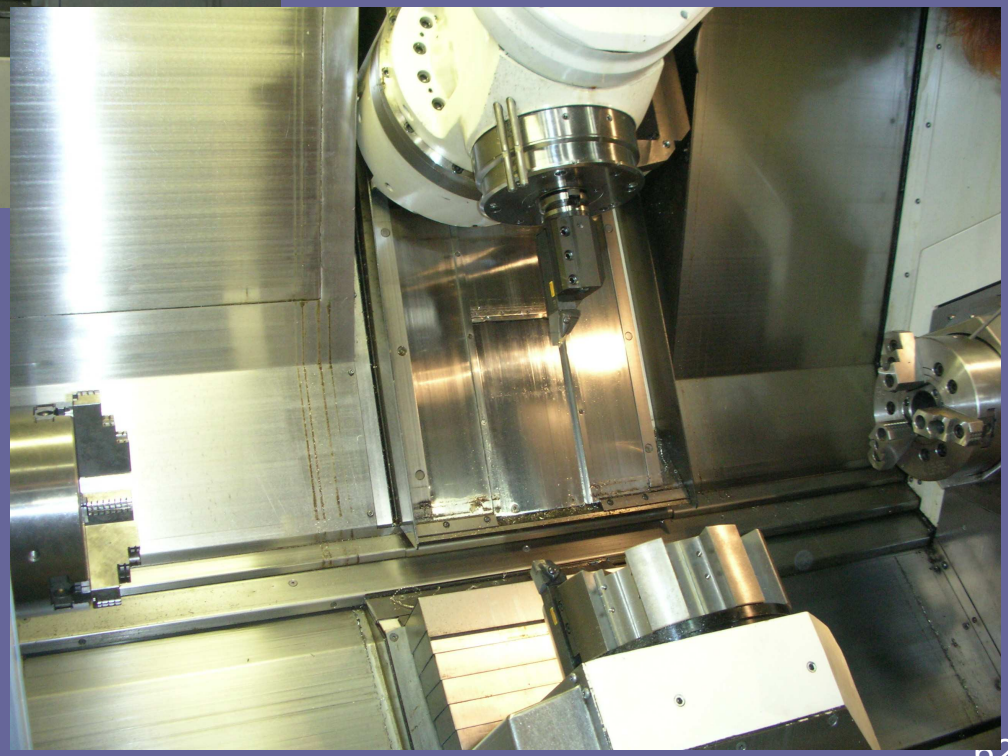


Mazak

Video presentation

Video #1

Video #2

Video #3

Video #4