ACI STRUCTURAL JOURNAL TECHNICAL PAPER

Title no. 102-S18

Repair and Strengthening of Reinforced Concrete Beam-Column Joints: State of the Art

by Murat Engindeniz, Lawrence F. Kahn, and Abdul-Hamid Zureick

The latest report by Joint ACI-ASCE Committee 352 (ACI 352R-02) states that joints in structures built before the development of current design guidelines need to be studied in detail to establish their adequacy and that methods of connection repair and strengthening need to be developed. Prior to developing new strengthening schemes, it is important that the findings from research previously conducted on other strengthening techniques be known. This paper presents a comprehensive up-to-date literature search pertaining to the performance of, as well as to the repair and strengthening techniques for, nonseismically designed reinforced concrete beam-column joints, reported between 1975 and 2003. These techniques included: 1) epoxy repair; 2) removal and replacement; 3) concrete jacketing; 4) concrete masonry unit jacketing; 5) steel jacketing and addition of external steel elements; and 6) strengthening with fiber-reinforced polymeric (FRP) composite applications. Each method of repair or strengthening is reviewed with emphasis on its application details, required labor, range of applicability, and performance. Relative advantages and disadvantages of each method are discussed.

Keywords: beam-column joints; fiber-reinforced polymer; reinforced concrete; repair.

INTRODUCTION

The performance of beam-column joints has long been recognized as a significant factor that affects the overall behavior of reinforced concrete (RC) framed structures subjected to large lateral loads.

The first design guidelines for reinforced concrete beam-column joints were published in 1976 in the U.S. (ACI 352R-76[1]) and in 1982 in New Zealand (NZS 3101:1982[2]). Buildings constructed before 1976 may have significant deficiencies in the joint regions. Especially since the 1985 Mexico earthquake, a considerable amount of research has been devoted to identifying the critical details of nonseismically designed buildings as well as to developing methods of strengthening. Through their reviews of detailing manuals and design codes from the past five decades and their consultation with practicing engineers, Beres et al.[3] (among others) identified seven details (shown in Fig. 1) as typical and potentially critical to the safety of gravity load-designed (GLD) structures in an earthquake. Most of the repair and strengthening schemes proposed thus far, however, have a very limited range of applicability either due to lack of consideration of floor members or to architectural restrictions. The current recommendations by Joint ACI-ASCE Committee 352[4] reads: "These joints need to be studied in detail to establish their adequacy and to develop evaluation guidelines for building rehabilitation. Methods for improving performance of older joints need to be studied. Scarce information is available on connection repair and strengthening."

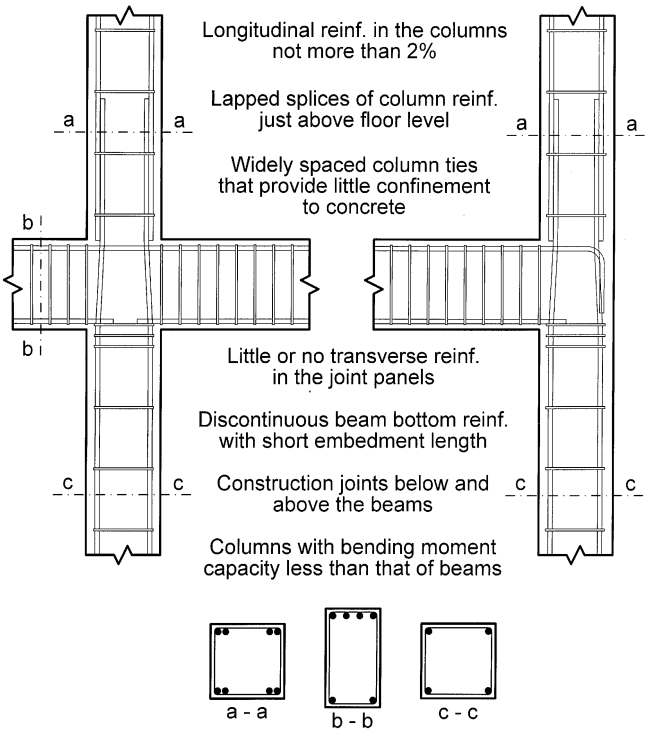

Fig. 1—Typical details in lightly reinforced concrete structures identified by Beres et al.[3]

RESEARCH SIGNIFICANCE

The objective of this paper is the collection of current information on repair and strengthening of nonseismically designed joints so that engineers and researchers may more efficiently proceed to develop improved seismic retrofits. Each method of repair or strengthening is reviewed with emphasis on its performance and relative advantages and disadvantages with respect to the application details, required labor, and range of applicability. Strengthening methods that may indirectly affect the performance of existing joints (for example, adding steel bracing or shear walls) are outside the scope of this study. The Appendix to this paper summarizes the performance of nonseismically designed joints.*

*The Appendix to this paper can be viewed on the ACI website at www.concrete.org.

ACI Structural Journal, V. 102, No. 2, March-April 2005.
MS No. 03-180 received May 22, 2003, and reviewed under Institute publication policies. Pertinent discussion including author's closure, if any, will be published in the January-February 2006 *ACI Structural Journal* if the discussion is received by September 1, 2005.

ACI member **Murat Engindeniz** *is a PhD candidate at the Georgia Institute of Technology, Atlanta, Ga., where he also received his MS in 2002. He received his BS from the Middle East Technical University, Ankara, Turkey, in 2000. His research interests include behavior and strengthening of nonseismically designed reinforced concrete structures.*

Lawrence F. Kahn, *FACI, is a professor at the Georgia Institute of Technology. He is a member of ACI Committees 364, Rehabilitation, and 546, Repair of Concrete. He is also a member of the ACI Concrete Research Council and TAC Repair and Rehabilitation Committee.*

Abdul-Hamid Zureick *is a professor of structural engineering, mechanics, and materials at the Georgia Institute of Technology. His research interests include design, testing, and construction of fiber-reinforced polymer composites for use in new construction and for the rehabilitation of existing structural systems.*

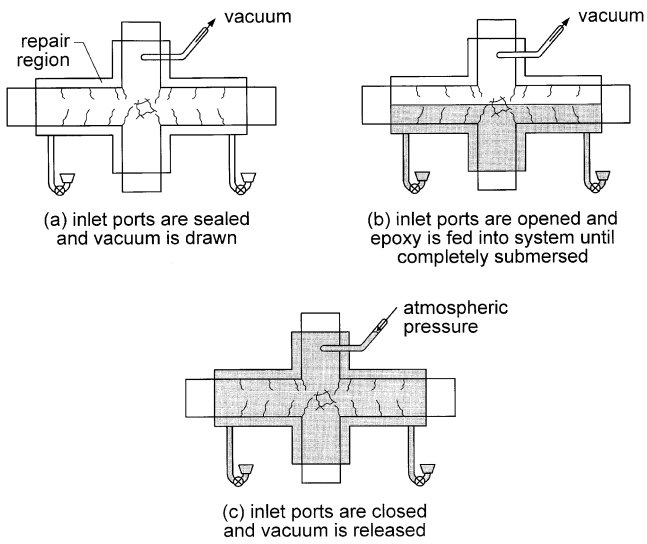

Fig. 2—Vacuum impregnation procedure applied by French, Thorp, and Tsai.[6]

REPAIR AND STRENGTHENING TECHNIQUES FOR BEAM-COLUMN JOINTS

Research on the repair and strengthening of joints included epoxy repair, removal and replacement, reinforced or prestressed concrete jacketing, concrete masonry unit jacketing or partial masonry infills, steel jacketing and/or addition of external steel elements, and fiber-reinforced polymer (FRP) composite applications. Each technique required a different level of artful detailing and consideration of labor, cost, disruption of building occupancy, and range of applicability. The main objective of the research was to establish a strength hierarchy between the columns, beams, and joints so that seismic strength and ductility demands could be accommodated through ductile beam hinging mechanisms instead of column hinging or brittle joint shear failures. In gravity load-designed structures, where beams are often stronger than columns, strengthening the column is generally not sufficient by itself since the joint then becomes the next weakest link due to either lack of transverse reinforcement, discontinuous beam bottom reinforcement, or other nonductile detailing. Thus, the shear capacity and the effective confinement of joints must be improved. Achieving such an improvement is challenging in actual three-dimensional frames because of the presence of transverse beams and floor slab that limit the accessibility of the joint and because of the difficulties in developing the strength of externally placed reinforcements (that is, steel plates, FRP sheets, or rods) within the small area of the joint. At present, the techniques that have been tested either have not accounted for the three-dimensional geometry of the actual frame joints and are applicable in only special cases, or they resulted in architecturally undesirable configurations with bulky members.

Epoxy repair

Concrete structures have long been repaired using pressure injection of epoxy;[5] a relatively new method of epoxy repair is vacuum impregnation. French, Thorp, and Tsai[6] studied the effectiveness of both epoxy techniques to repair two, one-way* interior joints that were moderately damaged due to inadequate anchorage of continuous beam bars. For vacuum impregnation (Fig. 2), epoxy inlet ports were located at the bottom of each beam and at the base of the column repair region. The vacuum was applied through three hoses attached at the top of the repair region in the column. Both repair techniques were successful in restoring over 85% of the stiffness, strength, and energy dissipation characteristics of the original specimens. Severe bond deterioration in the repaired joints occurred only one half-cycle earlier than in the original specimens. The main conclusion was that vacuum impregnation presents an effective means of repairing large regions of damage at once and that it can be modified for joints with fewer accessible sides.

Beres et al.[7] retested one of their deficiently detailed one-way interior joints (Fig. 1) after repairing it by vacuum-injection of methyl-methacrylate resin without removing the initially applied gravity load. The failure in both the original and repaired specimens was due to pullout of the embedded beam bottom bars and extensive diagonal cracks in the joint. Although the repair restored only 75% of the initial stiffness and 72% of the column shear capacity, the energy dissipation capacity remained almost unchanged due to a reduced rate of strength deterioration.

Filiatrault and Lebrun[8] reported on the performance of two one-way exterior joints, one with nonseismic detailing and one with closely spaced transverse reinforcement in the beam, column, and joint; each was repaired by epoxy pressure injection. Filiatrault and Lebrun[8] said that the repair procedure was particularly effective in improving the strength, stiffness, and the energy dissipation capacity of the nonseismically detailed specimen and that more pinching was observed in the hysteresis loops of the seismically detailed specimen after repair.

Karayannis, Chalioris, and Sideris[9] studied the effects of joint reinforcement arrangement on the efficiency of epoxy repair by pressure injection. Eleven of the tested one-way exterior joint specimens were repaired by epoxy injection only and then retested. In these specimens, cracks were observed both at the joint region and at the beam end during the first cycles, but the failure was finally due to beam hinging. After repair, the specimens with two joint stirrups or column longitudinal bars crossed within the joint exhibited only beam flexural failure with serious fragmentation of concrete at the beam end and significant reduction in pinching of the hysteresis loops. The specimens with one joint stirrup, however, exhibited the same failure mode before and after repair. The increases in peak load and dissipated energy were 8 to 40% and 53 to 139%, respectively. The change in stiffness varied between a 27% decrease and a

*A joint with no transverse beams or floor slab and loaded in its plane is called a "one-way joint" throughout this paper. Note that in the Joint ACI-ASCE 352 Committee Report,[4] a "one-way interior joint" is termed an exterior joint, and a "one-way exterior joint" is termed a corner joint.

10% increase. The variations in performance were partially attributed to the variations in being able to inject epoxy successfully into the joint cracks.

The results of the epoxy repair applications on one-way joints have shown that the reliability of this technique in restoring the original characteristics of damaged joints is questionable. The bond around the reinforcing bars, once destroyed, does not seem to be completely restored by epoxy injection.[10] This is evidenced by the partial recovery of stiffness and by the pinching in the hysteresis loops. It is also clear that the effectiveness of the epoxy repair is limited by the access to the joint and that epoxy cannot be effectively introduced into the joints surrounded by transverse beams and floor slab. This limitation can possibly be overcome by further advances in the vacuum impregnation technique. A high level of skill is required for satisfactory execution of such techniques, and application may be limited by the ambient temperature.[5] General guidelines for using epoxy in the repair of concrete structures and for verifying their field performance can be found in Reference 5, 11, and 12, respectively.

Removal and replacement

Partial or total removal and replacement of concrete is used for heavily damaged joints with crushed concrete, buckled longitudinal bars, or ruptured ties. Before the removal, the damaged structure must be temporarily supported to ensure stability. Depending on the amount of concrete removed, some additional ties or longitudinal reinforcement may be added.[13] Generally, high-strength, low- or nonshrink concrete is used for replacement. Special attention must be paid to achieving a good bond between the new and the existing concrete.

The experimental program conducted by Karayannis, Chalioris, and Sideris[9] included six one-way exterior joint specimens that exhibited a concentrated damage in the joint and a loss of considerable amount of concrete in this region. This damage mode can be attributed to the joint not having any stirrups in two of the specimens and to the flexural strength ratio being very low (0.67) in the others. The joints were repaired by first recasting the missing part of the joint with a high-strength (83 MPa [12,100 psi]), low-shrink cement paste, then by epoxy injection into the surrounding cracks. The repair did not alter the failure mode of the specimens with one or no joint stirrups, although an increase of 39 to 71% in peak load, 15 to 39% in stiffness, and 19 to 34% in energy dissipation capacity was observed. The specimens with two joint stirrups, however, improved remarkably after repair and developed a beam hinge with no damage to the joint. On average, the peak load and the dissipated energy increased by 42 and 170%, respectively, while only 80% of the stiffness could be recovered.

Tsonos[14] repaired two identical half-scale, one-way exterior joints by removing the concrete in the entire joint region and part of the column ends, and replacing it with a high-strength (70 MPa [10,150 psi]), nonshrink mortar. One of the specimens was also provided with two additional horizontal joint ties. The repair resulted in significant increases in the strength, stiffness, and energy dissipation capacity, especially toward the end of the tests. After repair, the specimens exhibited the same failure mode that involved the formation of a beam hinge and damage concentration in this region only. Thus, Tsonos[14] concluded that the requirements on joint transverse reinforcement can be relaxed when high-strength mortar is used for the repair of heavily damaged joints.

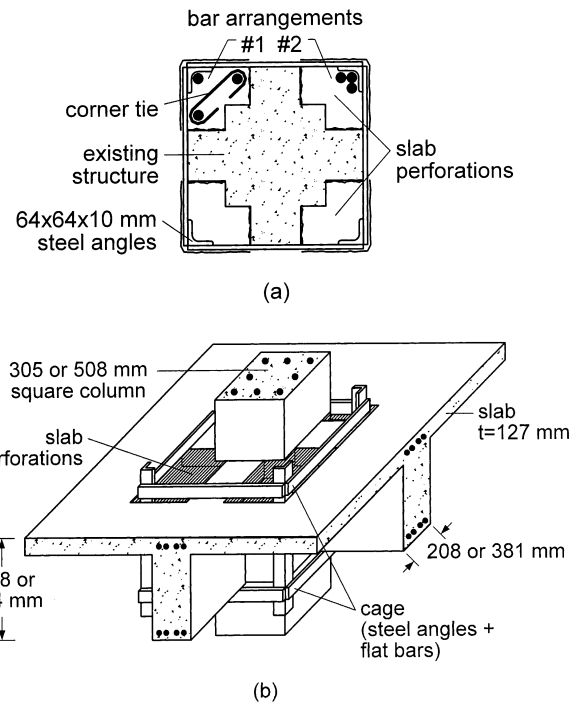

Fig. 3—Concrete jacketing technique studied by Alcocer and Jirsa:[17] (a) plan, and (b) perspective.

Clearly, a beam-column joint with crushed concrete and buckled or ruptured reinforcement cannot be strengthened by any method without removing and replacing the damaged concrete. The aforementioned experiment results show that this technique can be used for strengthening, even by itself, if high-strength nonshrink concrete is used for replacement. This, however, relies on the assumption that the damaged joint is readily accessible, which is rarely the case in actual buildings, and shoring can be economically provided. Also, Lee, Wight, and Hanson[15] stated that if only the beam end is repaired with this technique, the high strength of the repair materials can cause the damage to move from the beam to the unrepaired joint and column.

Concrete jackets

One of the earliest and the most common solutions for rehabilitation of concrete frames is to encase the existing column, along with the joint region, in new concrete with additional longitudinal and transverse reinforcement. The continuity of the added longitudinal bars through the joint requires opening the slab at the column corners (Fig. 3(a)). The addition of the joint transverse reinforcement makes the process even more labor-intensive, in which case the beams are also cored, and in-place bending of the hooks is necessary.

Corazao and Durrani[16] strengthened three single (two exterior: ER, ES1R; one interior: IR) and two multi-joint (two-bay) subassemblages (CS2R, CS4R), some including a floor slab, by jacketing the column, the joint region, and sometimes a portion of the beam. Due to the difficulties experienced with in-place bending of the crosstie hooks in the joint region, the additional joint reinforcement was modified to a set of dowels with a hook. The strength, stiffness, and energy dissipation capacity of all three single-joint specimens were increased, except for the one-way exterior joint that

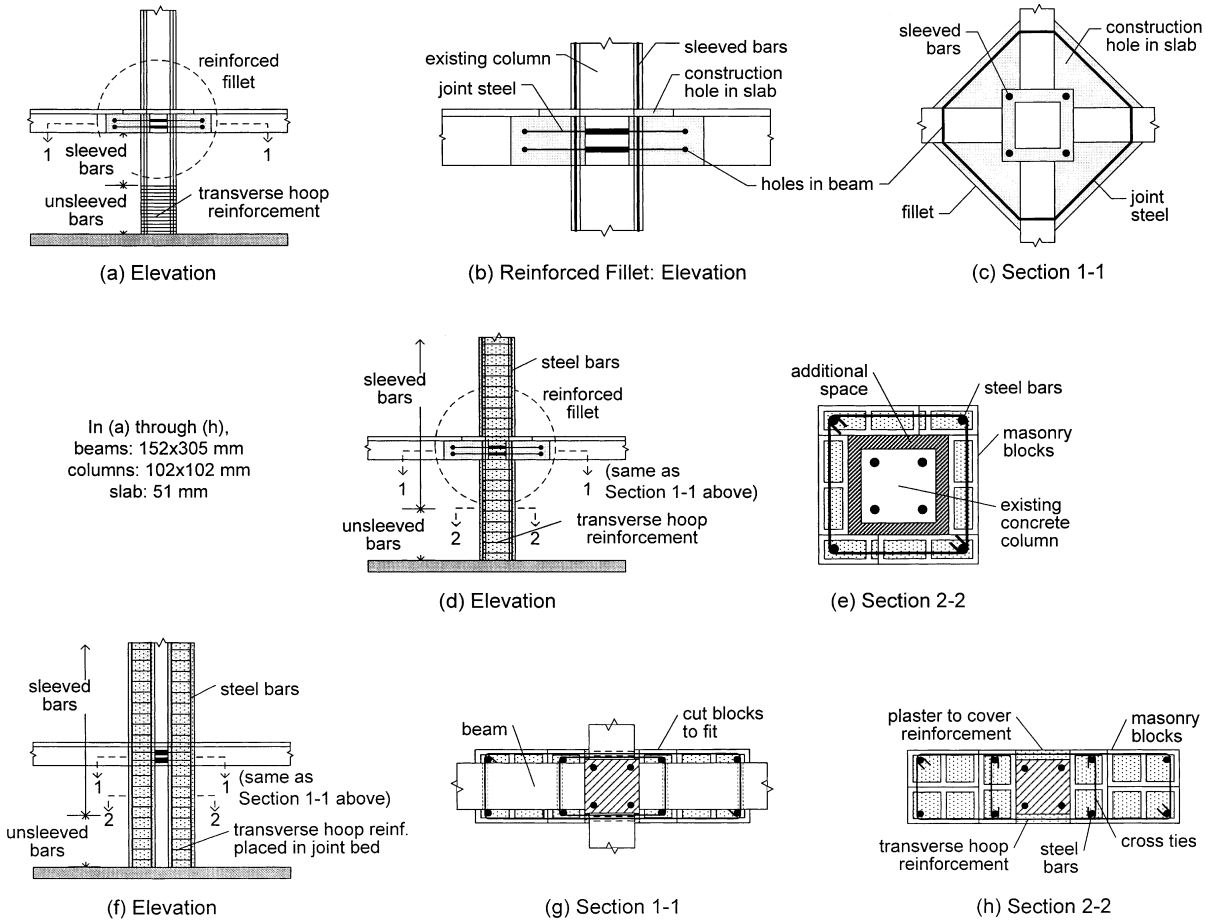

Fig. 4—Retrofit techniques studied by Bracci, Reinhorn, and Mander:[19] (a, b, and c) prestressed concrete jacketing; (d and e) masonry block jacketing; and (f, g, and h) partial masonry infill.

dissipated less energy after jacketing. In two of these specimens, the damage was successfully moved away from the joint due to added beam bottom bars hooked both in the joint and at 25 cm (10 in.) from the column face. The retrofit was not as effective in improving the behavior of the multi-joint specimens; the results were taken to indicate that jacketing of the columns alone was not adequate in restoring the performance without addressing the problem of load transfer between beams and columns.

In tests conducted by Alcocer and Jirsa[17] on four three-dimensional beam-column-slab subassemblages subjected to severe bidirectional loading, the need to drill holes through the beams for placing joint confinement reinforcement was eliminated by welding a structural steel cage around the joint (Fig. 3(b)). The cage consisted of steel angles designed to resist the lateral expansion of the joint and flat bars connecting the angles. The studied variables were jacketing the columns only or both beams and columns, jacketing after or prior to first damage, and using bundles or distributed vertical reinforcement (Fig. 3(a)) around the column. The critical section was within the jacket for the specimens with column jackets only, while the failure zone moved outside the cage when the beams were jacketed as well. It was reported that the steel cage and the corner ties confined the joint satisfactorily up to a 4% drift, at which time severe crushing and spalling occurred. Alcocer and Jirsa[17] recommended that the ACI 352R-76[1] provisions on joint strength and bond could be used to proportion the jacket and that distributed bars through the slab perforations should be preferred to bundles. The development of bundled bars can be a problem with smaller column-beam strength ratios.

Another jacketing method employed post-tensioning of the additional column reinforcement placed in a high-strength concrete jacket and a reinforced concrete fillet built around the unreinforced beam-column joint (Fig. 4(a) to (c)).[18,19] The bottom half of the first-story columns were conventionally jacketed with bonded longitudinal reinforcement and adequate transverse hoops to limit the strength enhancement due to post-tensioning and to ensure adequate energy dissipation in the event of an earthquake. Dimensions of the fillet were designed based on the required development length of the discontinuous beam bottom reinforcement and the desired beam hinge locations. As shown in Fig. 4(c), triangular segments of the slab were removed at the four corners of the column to permit placement of the fillets and vertical reinforcement, and all beams were drilled to place additional horizontal joint reinforcement. This method was first validated by Choudhuri, Mander, and Reinhorn[18] by testing a 1/3-scale two-way interior beam-column-slab subassemblage previously tested by Aycardi, Mander, and Reinhorn[20] without retrofit. Then, Bracci, Reinhorn, and Mander[19] evaluated analytically and experimentally the application of this retrofit scheme to the columns of the 1/3-scale frame structure tested;[21] the results

are summarized in the Appendix to this paper.* In the analytical part, the structure was analyzed for four different alternatives: either the interior or all columns were strengthened, and the first-story columns had either partial or full base fixity. In the experimental part, only the interior columns were strengthened and provided with partial base fixity, and a series of shaketable tests were conducted on the frame structure. Both the subassemblage test and the shaketable tests showed that the original soft-story mechanism was avoided and that flexural hinges occurred at beam ends adjacent to the newly cast joint fillets with no noticeable damage to the columns.

The experimental program performed by Hakuto, Park, and Tanaka[22] included testing of three one-way interior joints (R1, R2, and R3) with no joint reinforcement strengthened with RC jackets. The specimen previously damaged in the joint region was strengthened by jacketing the beams, columns, and joint. The joint core was strengthened using plain circular hoops consisting of two U-shaped ties placed through holes drilled in the beams and welded in place. In the retrofit of the two specimens with no previous damage, the joint core was kept unreinforced, and one of them had a column jacket only. A stable and ductile response with beam plastic hinges was obtained except for the specimen with column jacket only, which underwent an early beam shear failure (at 0.7% drift). The major conclusions regarding the retrofits were that the addition of joint core hoops is very labor-intensive, but the hoops may not be required for one-way interior joints if the existing column is enlarged by jacketing so that the joint shear stress is reduced to less than $0.07f_c'$.

Tsonos[23,24] studied the effectiveness of RC jackets in cases where one or more sides of the columns and beam-column joints to be strengthened are inaccessible due to adjacent structures. Four one-way exterior joints with insufficient or no joint ties were repaired with three-sided high-strength (~60 MPa [8,700 psi]) concrete jackets,[23] and another with no joint ties was repaired with a two-sided jacket.[24] Additional joint ties were placed by coring the beam, and short bars were placed in a transverse direction inside the hooks of the beam bars in the joint region to improve the anchorage of these bars. In the case of both two-sided and three-sided jacketing, the mode of failure before jacketing, which involved significant loss of joint concrete and damage at the column ends, was improved to formation of a beam hinge and buckling of beam bars after jacketing. The unjacketed rear side of the joints did not exhibit any distress. The hysteresis loops were remarkably improved in terms of peak load, stiffness, energy dissipation, and the amount of pinching.

An apparent disadvantage of concrete jacketing techniques is labor-intensive procedures such as perforating the floor slab, drilling through the beams, and sometimes in-place bending of the added joint transverse reinforcement. The need for drilling through the beams could be eliminated by welding a steel cage around the joint (Fig. 3), but this results in poor appearance. Jacketing increases the member sizes, which reduces the available floor space and increases mass. The construction procedures also disrupt building occupants, which may well add to the overall cost of the rehabilitation. Finally, such jacketing techniques alter the dynamic characteristics of the building (for example, a 120% increase in first mode period and a 73% increase in base shear capacity was reported by Bracci, Reinhorn, and Mander[19]). Changed dynamics may cause increased demands at unintended locations, and may require careful reanalysis. Nevertheless, concrete jacketing techniques did provide increased joint strength, shifted the failure to the beam, and increased overall lateral strength and energy dissipation.

Reinforced masonry blocks

Bracci, Reinhorn, and Mander[19] analyzed (but did not test) strengthening using reinforced concrete masonry units (CMUs). The first method required the existing interior columns to be jacketed by CMUs, with additional longitudinal reinforcement within the corner cores extending continuously through the slabs and later post-tensioned (Fig. 4(d) and (e)). Any space between the units and the existing column was then grouted. The shear capacity was increased by providing wire mesh in the mortar bed joints. A reinforced concrete fillet (Fig. 4(b) and (c)) was built around the joints. In a second method, partial masonry infills reinforced with post-tensioned vertical reinforcement were constructed on each side of existing columns as shown in Fig. 4(f) through (h). The exact number of units was governed by the development length of the discontinuous beam bottom reinforcement. The beam-column joints were strengthened in shear by wrapping with rectangular hoops passing through holes drilled in beams. Nonlinear dynamic analyses on the 1/3-scale, three-story GLD model,[21] incorporating the results from previous component tests,[20] showed that strong column-weak beam behavior was enforced and that adequate control of interstory drifts was achieved. For the case in which all columns in the model were strengthened, a beam hinging mechanism was dominant. When only interior columns were strengthened, a predominant beam hinge mechanism was accompanied by some yielding in upper story exterior columns.

The same limitations mentioned previously for concrete jacketing also apply to CMU jacketing. In the case of partial masonry infills, an added functional disadvantage is an increased loss of internal space between the bays.

Steel jackets and external steel elements

Various configurations of steel jackets, plates, or shapes have been used to increase the strength and ductility of deficient beam-column joints. Steel jackets consist of flat or corrugated steel plates, or rectangular or circular steel tubes prefabricated in parts and welded in place. The space between the jacket and RC frame is grouted with nonshrink or expansive cement mortar. Steel parts are often mechanically anchored to the concrete to improve confinement. Attaching plates to selected faces of the members using adhesives and bolts, and connecting these plates using rolled shapes (for example, angles) has also been attempted.

Corazao and Durrani[16] strengthened one exterior (ES2R) and one interior (IS1R) two-way beam-column-slab subassemblage by bolting and epoxy-bonding external steel plates on each column face, welding steel angles to the plates, and by enlarging the joint region with a concrete fillet. As shown in Fig. 5, the joint enlargement was similar to that used by Bracci, Reinhorn, and Mander[19] (Fig. 4(c)) except that the continuous joint hoops were replaced with dowels with a hook. The steel plates bonded at each face of the upper and lower columns were bolted to the old concrete near the joint and connected to each other by welded angles continuous through the slab. In the case of the interior joint, a plate was also bonded and bolted to the underside of the

*Available on ACI's website at www.concrete.org.

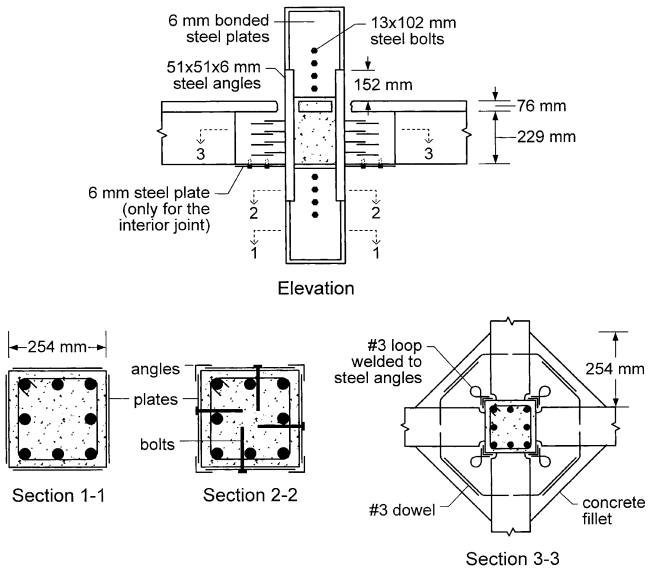

Fig. 5—External steel configurations studied by Corazao and Durrani.[16]

enlarged joint. For both specimens, cracking near the joint observed before retrofit was successfully moved to the end of the enlarged joint region after retrofit, and there was no evidence of damage in the column or its external reinforcement. The strength, initial stiffness, and energy dissipation of the exterior joint were increased by approximately 18, 12, and 2%, respectively. The corresponding increases for the interior joint were 21, 34, and 13%, respectively. The better improvement in the energy dissipation of the interior joint was attributed to the slippage between concrete and the steel plates of that joint.

Beres et al.[7] considered two different external plate configurations for strengthening one of their interior joints with discontinuous beam bottom reinforcement and for one of their exterior joints. To prevent pullout of the beam bottom bars, the interior joint was strengthened by bolting two steel channel sections to the underside of the beams and connecting them by two steel tie-bars running alongside the column (Fig. 6(a)). The damage was transferred from the joint embedment zone to other parts of the joint; a 20% increase in peak strength, 10 to 20% increase in stiffness, and no significant change in energy dissipation were observed. The objective of the exterior joint retrofit was to force the flexural hinges to form in the beam and to increase the joint confinement. External steel plates placed along the opposite faces of the upper and lower columns were connected with threaded rods (Fig. 6(b)). This retrofit prevented the cracks from extending into the column bar splice region. A flexural hinge formed in the joint panel close to the beam, which was followed by the pullout of the beam bottom bars. The increase in the peak strength and the initial stiffness were 33 and 12%, respectively, with a higher rate of degradation than in the unstrengthened specimen. A notable increase in energy dissipation was observed in the final stages of loading.

Ghobarah, Aziz, and Biddah[25] and Biddah, Ghobarah, and Aziz[26] proposed the use of corrugated steel shapes to provide high out-of-plane stiffness. The grouted corrugated steel jacket was intended to provide an early lateral confinement effect in the elastic range of the RC column as well as additional shear resistance in the column, beam, and joint. The cross section of the corrugated steel plates and of the two-part jackets before and after installation are shown in

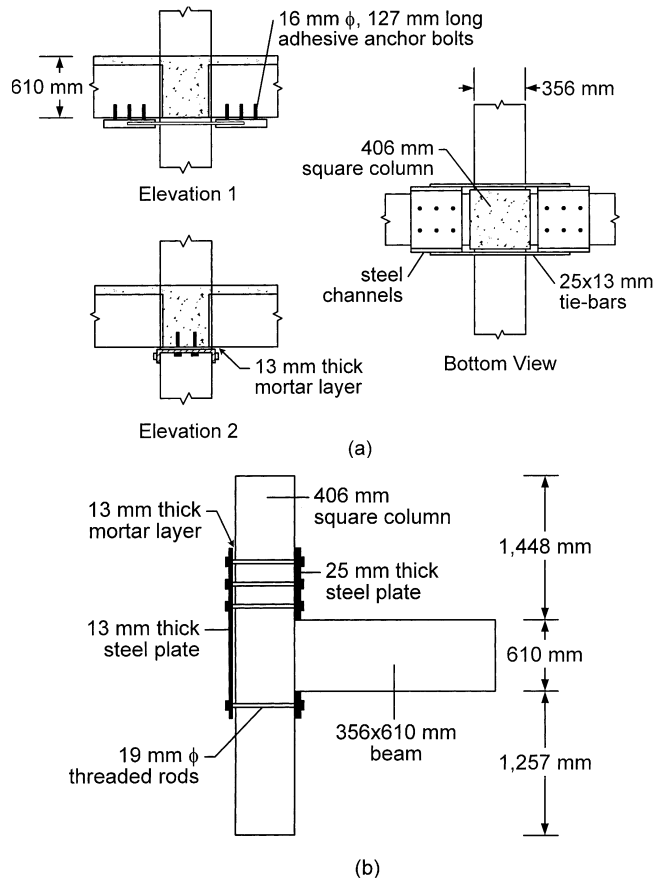

Fig. 6—External steel configurations studied by Beres et al.[7]

Fig. 7. In addition to the in-place welding, the joint jacket was also anchored to the concrete using two steel angles and anchor bolts (Fig. 7(a)). A 20 mm (0.79 in.) gap was provided between the end of the beam jacket and the column face to minimize the flexural strength enhancement. Tests on four one-way exterior joints showed that the proposed system could change the joint shear failure mode to a ductile flexural mode in the beam when both the column and the beam were jacketed.[25] Effective confinement was achieved up to a 5% drift by increasing the ultimate compressive strain of concrete. Biddah, Ghobarah, and Aziz[26] added to this study by testing two exterior joint specimens with discontinuous beam bottom bars. One of them was a reference specimen, and the second was strengthened with a corrugated steel jacket around the column only in addition to two steel plates bolted to the beam and to the joint to prevent pullout of beam bottom bars. This strengthening system could not resist the bottom bar pullout observed in the reference specimen, and the bolts failed in shear; however, the system did provide an increase of approximately 38% in strength and 180% in energy dissipation capacity. A design methodology for calculating the required thicknesses of the corrugated steel jackets and the grout was also proposed.[25]

The authors believe that, when compared with concrete and masonry jackets, the use of steel jackets can significantly reduce the construction time due to prefabrication. Disadvantages, however, such as the potential for corrosion, difficulty in handling the heavy steel plates, objectionable aesthetics in the case of corrugated steel shapes, and loss of floor space in the case of grouted steel tubes, cannot be overlooked. Steel jackets may result in excessive capacity increases, even where only confinement effect is intended, and create unexpected

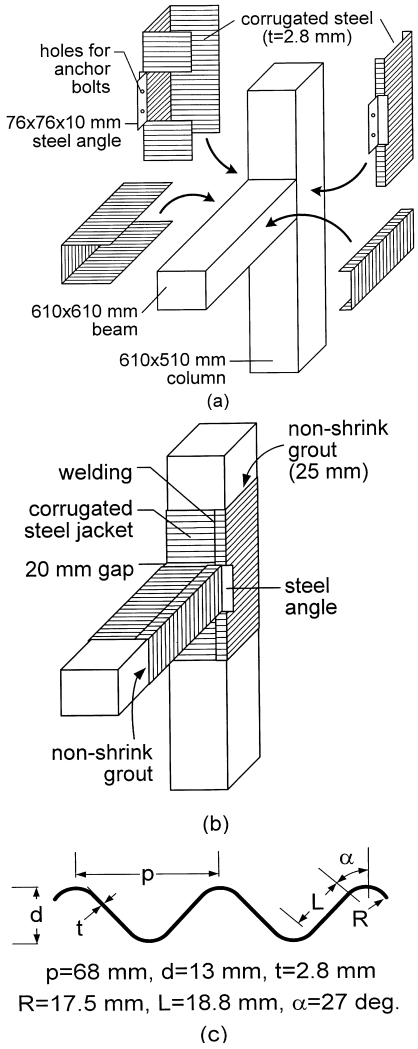

Fig. 7—Corrugated steel jacketing technique proposed by Ghobarah, Aziz, and Biddah:[25,26] (a) before installation; (b) after installation; and (c) cross section of corrugated steel plates.

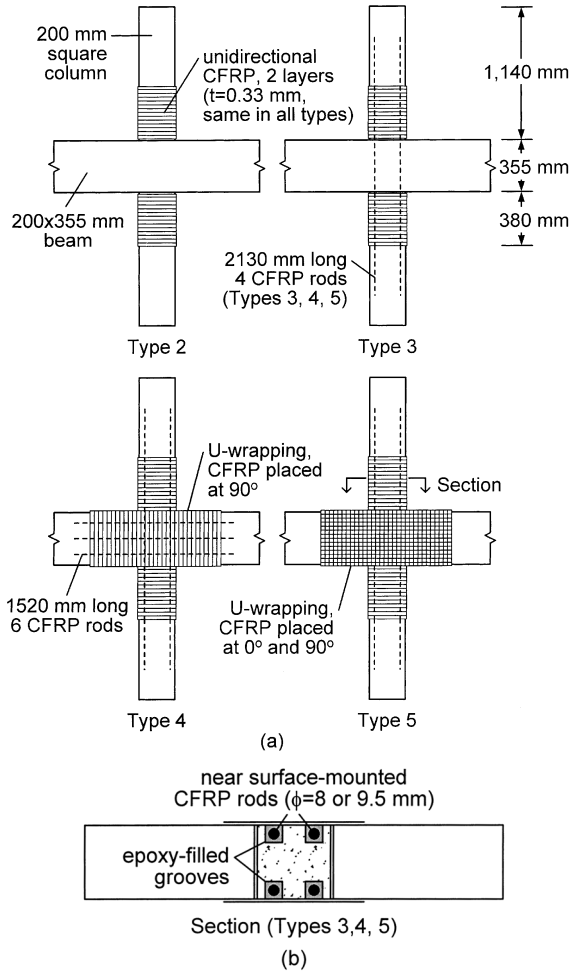

Fig. 8—Specimens strengthened with CFRP sheets and/or rods, tested by Prota et al.:[35,36] (a) elevation, and (b) plan.

failure modes.[27] Even if these disadvantages are ignored, it seems difficult to apply these schemes to actual three-dimensional joints. The presence of a floor slab, for instance, makes it difficult, if not unfeasible, to install beam jackets such as shown in Fig. 7. Although different two-part corrugated steel jackets have been proposed[26] for interior, exterior, and corner joints with floor slab, there are no available data to validate their performance. Prestressing by preheating of externally attached steel straps in a repair scheme has been useful,[28] but should not be relied on because it is difficult to control in the field.

Fiber-reinforced polymeric composites

Since 1998, research efforts on upgrading existing beam-column joints have focused on the use of FRP composites in the form of epoxy-bonded flexible sheets, shop-manufactured strips, or near-surface-mounted rods. The relatively higher initial cost of FRPs is purportedly outweighed by their advantages such as high strength-weight ratios, corrosion resistance, ease of application (including limited disruption to building occupancy), low labor costs, and no significant increase in member sizes.[29,30] They are most attractive for their tailorability; the fiber orientation in each ply can be adjusted so that specific strengthening objectives such as increasing the strength only, confinement only, or both, can be achieved. An externally bonded FRP system requires that the concrete surface be thoroughly cleaned (all loose materials removed, and cracks epoxy-injected in damaged structures), a penetrating epoxy primer be applied, and each ply be placed between two coats of resin. Zureick and Kahn[31] postulated that the primer and the resin should only be applied when the ambient temperature is between 5 and 32 °C, the relative humidity is less than 90%, the concrete surface temperature is more than 2 °C above the dew point, and the concrete moisture content is no greater than 4%. They also suggested that the glass transition temperature of the resin should be at least 30 °C above the maximum operating temperature and that elapsed time between mixing and application of the first ply and between any two successive plies should be within a time period not exceeding the gel time of the resin.

At present, the literature on FRP-strengthened joints mainly consists of simplified two-dimensional tests[30,32-41] and an analytical study.[29]

Prota et al.[35,36] used CFRP rods in combination with externally bonded sheets (Fig. 8(a)) to upgrade and test 11 one-way interior joints with three different levels of column axial load in an attempt to shift the failure first from the column to the joint, then from the joint to the beam. The CFRP rods were placed in epoxy-filled grooves prepared near the

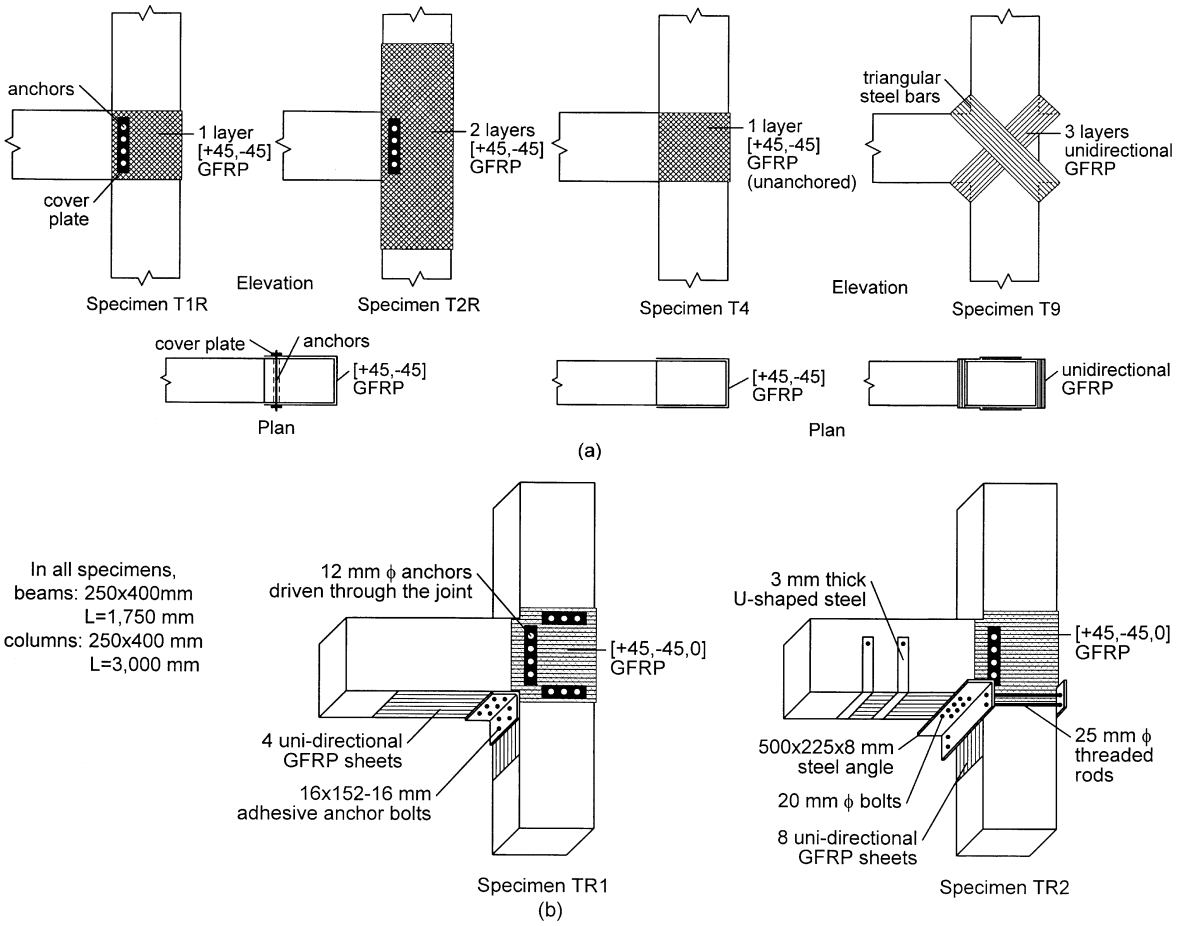

Fig. 9—Glass fiber-reinforced polymer-strengthened specimens tested by: (a) Ghobarah and Said,[30] and (b) El-Amoury and Ghobarah.[37]

surface (Fig. 8(b)). The failure modes could not be controlled as intended, and a ductile beam failure was not achieved. The Type 2 scheme moved the failure from the compression to the tension side of the column for low column axial load while, for high axial load, a combined column-joint failure occurred. The addition of CFRP rods as flexural reinforcement along the column (Type 3) led to a joint shear failure. When the joint panel was also strengthened (Type 4), the column-joint interface failed, which was attributed to termination of the FRP sheet reinforcement at that location to account for the presence of a floor system. The increases in strength were 7 to 33% for Type 2, 39 and 62% for Type 3, and 37 and 83% for Type 4. The changes in the maximum story drift for low and high column axial load were –11 and 25% for Type 2, 6 and –14% for Type 3, and 73 and 51% for Type 4, where negative values indicate loss of ductility. The Type 5 scheme with U-wrapping of the beam and joint resulted in a failure mode similar to that of Type 4.

Ghobarah and Said[30] tested four, one-way exterior joints (Fig. 9(a)), originally designed to fail in joint shear, with or without strengthening by unidirectional or bidirectional (±45 degrees) glass fiber-reinforced polymer (GFRP) sheets. Specimens T1R and T2R, previously damaged in the joint region and repaired, were provided with mechanical anchorage using steel plates and threaded rods core-drilled through the joint. While the GFRP sheet anchored through the joint in Specimen T1R was effective until it failed in tension, it provided no improvement in Specimen T4 due to lack of threaded-rod anchorage and the resulting early delamination. No debonding or joint shear cracking was observed in Specimen T2R; the failure was due to a beam plastic hinge. The placement of the diagonal unidirectional strips in Specimen T9 was facilitated by the triangular steel bars fitted at the four corners of the joint panel. This scheme could not prevent expansion of the joint concrete, which led to delamination and a simultaneous failure of the beam and joint. Overall, this study highlighted the importance of anchorage of composite sheets in developing the full fiber strength in a small joint area.

El-Amoury and Ghobarah[37] modified these GFRP schemes, as shown in Fig. 9(b), for strengthening joints with both inadequate anchorage of beam bottom bars and no hoop shear reinforcement. Both schemes resulted in an approximate 100% increase in load-carrying capacity; Specimens TR1 and TR2 dissipated three and six times the energy dissipated by the reference specimen, respectively. The failure of Specimen TR1 was due to complete debonding of the composites from the beam and column surfaces, and pullout of the beam bottom bars led by fracture of the weld around the bolt heads. In Specimen TR2, the use of two U-shaped steel plates eliminated debonding of the GFRP and reduced the strength degradation; this specimen eventually failed in joint shear.

As part of the experimental program conducted by Clyde and Pantelides,[38] the performance of CFRP sheets on a

single, one-way exterior joint was investigated. With the CFRP layout shown in Fig. 10, the joint shear failure in the original specimens was shifted to the beam-column interface with minimal damage in the CFRP wrap. The increases in joint shear strength, maximum drift, and energy dissipation capacity were 5, 78, and 200%, respectively.

Antonopoulos and Triantafillou[29] analytically modeled FRP-strengthened joints based on the original model by Pantazopoulou and Bonacci.[42] The states of stress and strain at six stages of the response were numerically solved until concrete crushing or FRP failure due to fracture or debonding occurred. To validate their analytical model and determine the role of various parameters on the effectiveness of FRP, Antonopoulos and Triantafillou[39] also conducted 2/3-scale reverse-cycle tests on 18 exterior joints strengthened with various configurations of pultruded carbon strips and with flexible carbon or glass fiber sheets. The investigated variables were the following: area fraction and distribution of FRP, column axial load, internal joint reinforcement, initial damage, carbon versus glass fibers, sheets versus strips, and the effect of transverse stub beams. All 18 specimens were designed to fail in joint shear both before and after strengthening so that the contribution of FRP to the joint shear capacity could be evaluated. Consequently, the failures were preceded by partial or complete debonding of composites (either at the unanchored ends or near the joint corners), leading to substantial pinching in the hysteresis loops. An increase in column axial load from 4 to 10% of its axial load capacity improved the strength increase from 65 to approximately 85% and the energy increase from 50 to 70%. The increase in stiffness varied in each loading cycle and reached values around 100%. The conclusions of this research highlighted the need for mechanical anchorage, better performance of flexible sheets over strips, the positive effect of increased column axial load on shear capacity of FRP-strengthened joints, better energy dissipation due to glass fibers than carbon fibers, increased effectiveness of FRP due to less internal joint reinforcement, and the negative effect of transverse stubs on the effectiveness of FRPs. Analytical predictions[29] of shear strength were found to be in good agreement with these experimental results as well as with the results of Gergely, Pantelides, and Reaveley.[34]

The aforementioned survey of the literature indicates that externally bonded FRP composites can eliminate some of the important limitations (for example, difficulties in construction or increases in member sizes) of other strengthening techniques, and still improve the joint shear capacity and shift the failure towards ductile beam hinging mechanisms. Such improvements have been achieved even with low quantities of FRP by placing the fibers in ±45- degree directions in the joint region and by wrapping the member ends to clamp the ±45-degree sheets and increase the confinement. Most studies have shown that the behavior is dominated by debonding of the composites from the concrete surface, and have indicated the need for a thorough surface preparation as well as for reliable mechanical anchorage methods that would lead to effective joint confinement and full development of fiber strength. The authors believe that the development of such anchorage methods can possibly create a potential for FRP-strengthened actual three-dimensional joints, which are yet to be tested. Though a high level of skill is not necessary, selection and application of FRP composites requires careful consideration of the environmental conditions (for example, temperature and humidity) present at the time of application and likely during the service life.[31]

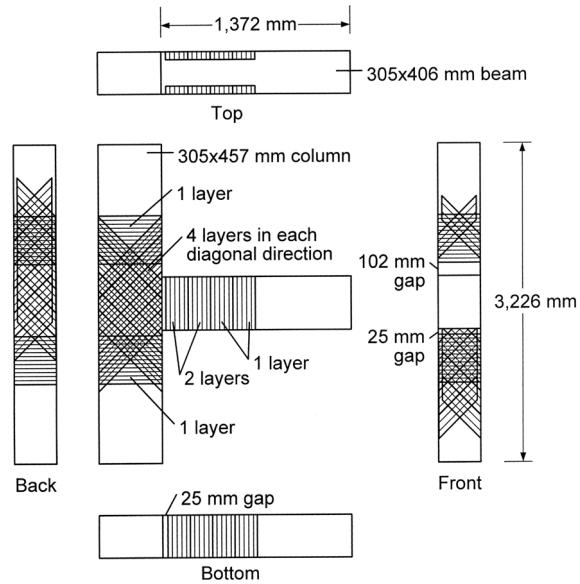

Fig. 10—Carbon fiber-reinforced polymer-strengthened specimen tested by Clyde and Pantelides.[38]

The following publications were also reviewed in this study but could not be incorporated in this paper due to space limitations: Dogan, Hill, and Krstulovic-Opara;[43] Shannag, Barakat, and Abdul-Kareem;[44] Migliacci et al.;[28] Adin, Yankelevsky, and Farhey;[45] Hoffschild, Prion, and Cherry;[27] Gergely et al.;[32] Gergely, Pantelides, and Reaveley;[34] Pantelides et al.;[33] Pantelides and Gergely;[46] Tsonos and Stylianidis;[40] and Karayannis and Sirkelis.[41] A detailed review of these publications is presented elsewhere.[47]

CONCLUSIONS

From the literature review on the performance, repair, and strengthening of nonseismically detailed RC beam-column joints presented in this paper, the following conclusions were drawn:

1. The critical nonseismic joint details in existing RC structures have been well-identified as shown in Fig. 1; however, the investigation of their effects on seismic behavior have been limited to testing of isolated one-way joints (no floor slab, transverse beams, or bidirectional loads) to a very large extent, and 1/8- and 1/3-scale building models that may not accurately simulate the actual behavior of structural details;

2. Epoxy repair techniques have exhibited limited success in restoring the bond of reinforcement, in filling the cracks, and restoring shear strength in one-way joints, although some authors believe it to be inadequate and unreliable.[13] The authors believe that injection of epoxy into joints surrounded by floor members would be similarly difficult;

3. Concrete jacketing of columns and encasing the joint region in a reinforced fillet is an effective but the most labor-intensive strengthening method due to difficulties in placing additional joint transverse reinforcement. Welding an external steel cage around the joint instead of adding internal steel has also proven effective in the case of a three-dimensional interior joint test. These methods are successful in creating strong column-weak beam mechanisms, but suffer from considerable loss of floor space and disruption to building occupancy;

4. An analytical study showed that joint strengthening with reinforced masonry units can lead to desirable ductile beam failures and reduction of interstory drifts; however, no experimental data are available to validate their performance;

5. Grouted steel jackets tested to date cannot be practically applied in cases where floor members are present. If not configured carefully, such methods can result in excessive capacity increases and create unexpected failure modes. Externally attached steel plates connected with rolled sections have been effective in preventing local failures such as beam bottom bar pullout and column splice failure; they have also been successfully used in combination with a reinforced concrete fillet surrounding the joint;

6. Externally bonded FRP composites can eliminate some important limitations of other strengthening methods such as difficulties in construction and increases in member sizes. The shear strength of one-way exterior joints has been improved with ±45-degree fibers in the joint region; however, ductile beam failures were observed in only a few specimens, while in others, composite sheets debonded from the concrete surface before a beam plastic hinge formed. Reliable anchorage methods need to be developed to prevent debonding and to achieve full development of fiber strength within the small area of the joint, which can possibly lead to the use of FRPs in strengthening of actual three-dimensional joints; and

7. Most of the strengthening schemes developed thus far have a limited range of applicability, if any, either due to the unaccounted floor members (that is, transverse beams and floor slab) in real structures or to architectural restrictions. Experiments conducted to date have generally used only unidirectional load histories. Therefore, the research in this area is far from complete, and a significant amount of work is necessary to arrive at reliable, cost-effective, and applicable strengthening methods. In developing such methods, it is important that testing programs be extended to include critical joint types (for example, corner) under bidirectional cyclic loads.

REFERENCES

1. Joint ACI-ASCE Committee 352, "Recommendations for Design of Beam-Column Joints in Monolithic Reinforced Concrete Structures (ACI 352R-76)," ACI JOURNAL, *Proceedings* V. 73, No. 7, July 1976, pp. 375-393.

2. Standard Association of New Zealand, "Code of Practice for the Design of Concrete Structures (NZS 3101:1982)," Wellington, 1982, Part 1, 127 pp., and Part 2, 156 pp.

3. Beres, A.; Pessiki, S. P.; White, R. N.; and Gergely, P., "Implications of Experiments on the Seismic Behavior of Gravity Load Designed RC Beam-to-Column Connections," *Earthquake Spectra*, V. 12, No. 2, May 1996, pp. 185-198.

4. Joint ACI-ASCE Committee 352, "Recommendations for Design of Beam-Column Connections in Monolithic Reinforced Concrete Structures (ACI 352R-02)," American Concrete Institute, Farmington Hills, Mich., 2002, 37 pp.

5. ACI Committee 224, "Causes, Evaluation, and Repair of Cracks in Concrete Structures (ACI 224.1R-93 [Reapproved 1998])," American Concrete Institute, Farmington Hills, Mich., 1993, 22 pp.

6. French, C. W.; Thorp, G. A.; and Tsai, W. J., "Epoxy Repair Techniques for Moderate Earthquake Damage," *ACI Structural Journal*, V. 87, No. 4, July-Aug. 1990, pp. 416-424.

7. Beres, A.; El-Borgi, S.; White, R. N.; and Gergely, P., "Experimental Results of Repaired and Retrofitted Beam-Column Joint Tests in Lightly Reinforced Concrete Frame Buildings," *Technical Report* NCEER-92-0025, SUNY/Buffalo, 1992.

8. Filiatrault, A., and Lebrun, I., "Seismic Rehabilitation of Reinforced Concrete Joints by Epoxy Pressure Injection Technique," *Seismic Rehabilitation of Concrete Structures*, SP-160, G. M. Sabnis, A. C. Shroff, and L. F. Kahn, eds., American Concrete Institute, Farmington Hills, Mich., 1996, pp. 73-92.

9. Karayannis, C. G.; Chalioris, C. E.; and Sideris, K. K., "Effectiveness of RC Beam-Column Connection Repair Using Epoxy Resin Injections," *Journal of Earthquake Engineering*, V. 2, No. 2, 1998, pp. 217-240.

10. Popov, E., and Bertero, V. V., "Repaired R/C Members under Cyclic Loading," *Earthquake Engineering and Structural Dynamics*, No. 4, 1975, pp. 129-144.

11. ACI Committee 503, "Use of Epoxy Compounds with Concrete (ACI 503R-93 [Reapproved 1998])," American Concrete Institute, Farmington Hills, Mich., 1993, 28 pp.

12. International Concrete Repair Institute, "Guide for Verifying Field Performance of Epoxy Injection of Concrete Cracks (Guideline No. 03734, Dec. 1998)," *Concrete Repair Manual*, published jointly by ICRI & ACI, Farmington Hills, Mich., 1999, pp. 607-616.

13. UNDP/UNIDO PROJECT RER/79/015, UNIDO, "Repair and Strengthening of Reinforced Concrete, Stone and Brick-Masonry Buildings," *Building Construction Under Seismic Conditions in the Balkan Regions*, V. 5, Vienna, 1983, 231 pp.

14. Tsonos, A. G., "Seismic Rehabilitation of Reinforced Concrete Joints by the Removal and Replacement Technique," *European Earthquake Engineering*, No. 3, 2001, pp. 29-43.

15. Lee, D. L. N.; Wight, J. K.; and Hanson, R. D., "Repair of Damaged Reinforced Concrete Frame Structures," *Proceedings of the Sixth World Conference on Earthquake Engineering*, V. 3, New Delhi, India, Jan. 1977, pp. 2486-2491.

16. Corazao, M., and Durrani, A. J., "Repair and Strengthening of Beam-to-Column Connections Subjected to Earthquake Loading," *Technical Report* NCEER-89-0013, SUNY/Buffalo, 1989.

17. Alcocer, S. M., and Jirsa, J. O., "Strength of Reinforced Concrete Frame Connections Rehabilitated by Jacketing," *ACI Structural Journal*, V. 90, No. 3, May-June 1993, pp. 249-261.

18. Choudhuri, D.; Mander, J. B.; and Reinhorn, A. M., "Evaluation of Seismic Retrofit of Reinforced Concrete Frame Structures: Part I—Experimental Performance of Retrofitted Subassemblages," *Technical Report* NCEER-92-0030, SUNY/Buffalo, 1992.

19. Bracci, J. M.; Reinhorn, A. M.; and Mander, J. B., "Seismic Retrofit of Reinforced Concrete Buildings Designed for Gravity Loads: Performance of Structural Model," *ACI Structural Journal*, V. 92, No. 6, Nov.-Dec. 1995, pp. 711-723.

20. Aycardi, L. E.; Mander, J. B.; and Reinhorn, A. M., "Seismic Resistance of Reinforced Concrete Frame Structures Designed Only for Gravity Loads: Experimental Performance of Subassemblages," *ACI Structural Journal*, V. 91, No. 5, Sept.-Oct. 1994, pp. 552-563.

21. Bracci, J. M.; Reinhorn, A. M.; and Mander, J. B., "Seismic Resistance of Reinforced Concrete Frame Structures Designed for Gravity Loads: Performance of Structural System," *ACI Structural Journal*, V. 92, No. 5, Sept.-Oct. 1995, pp. 597-609.

22. Hakuto, S.; Park, R.; and Tanaka, H., "Seismic Load Tests on Interior and Exterior Beam-Column Joints with Substandard Reinforcing Details," *ACI Structural Journal*, V. 97, No. 1, Jan.-Feb. 2000, pp. 11-25.

23. Tsonos, A. G., "Seismic Retrofit of R/C Beam-to-Column Joints using Local Three-Sided Jackets," *European Earthquake Engineering*, No. 1, 2001, pp. 48-64.

24. Tsonos, A. G., "Seismic Repair of Exterior R/C Beam-to-Column Joints Using Two-Sided and Three-Sided Jackets," *Structural Engineering and Mechanics*, V. 13, No. 1, 2002, pp. 17-34.

25. Ghobarah, A.; Aziz, T. S.; and Biddah, A., "Rehabilitation of Reinforced Concrete Frame Connections Using Corrugated Steel Jacketing," *ACI Structural Journal*, V. 4, No. 3, May-June 1997, pp. 283-294.

26. Biddah, A.; Ghobarah, A.; and Aziz, T. S., "Upgrading of Nonductile Reinforced Concrete Frame Connections," *Journal of Structural Engineering*, ASCE, V. 123, No. 8, Aug. 1997, pp. 1001-1009.

27. Hoffschild, T. E.; Prion, H. G. L.; and Cherry, S., "Seismic Retrofit of Beam-to-Column Joints with Grouted Steel Tubes," *Recent Developments in Lateral Force Transfer in Buildings*: *Thomas Paulay Symposium*, SP-157, N. Priestley, M. P. Collins, and F. Seible, eds., American Concrete Institute, Farmington Hills, Mich., 1995, pp. 397-425.

28. Migliacci, A.; Antonucci, R.; Maio, N. A.; Napoli, P.; Ferreti, S. A.; and Via, G., "Repair Techniques of Reinforced Concrete Beam-Column Joints," *Final Report, Proceedings of the IABSE Symposium on Strengthening of Building Structures—Diagnosis and Therapy*, International Association of Bridge and Structural Engineering (IABSE), Zurich, Switzerland, 1983, pp. 355-362.

29. Antonopoulos, C. P., and Triantafillou, T. C., "Analysis of FRP-Strengthened RC Beam-Column Joints," *Journal of Composites for Construction*, ASCE, V. 6, No. 1, Feb. 2002, pp. 41-51.

30. Ghobarah, A., and Said, A., "Shear Strengthening of Beam-Column Joints," *Engineering Structures: The Journal of Earthquake, Wind and Ocean Engineering*; V. 24, No. 7, July 2002, pp. 881-888.

31. Zureick, A., and Kahn, L., "Rehabilitation of Reinforced Concrete

Structures Using Fiber-Reinforced Polymer Composites," *ASM Handbook*, ASM International, V. 21, 2001, pp. 906-913.

32. Gergely, I.; Pantelides, C. P.; Nuismer, R. J.; and Reaveley, L. D., "Bridge Pier Retrofit Using Fiber-Reinforced Plastic Composites," *Journal of Composites for Construction*, ASCE, V. 2, No. 4, Nov. 1998, pp. 165-174.

33. Pantelides, C. P.; Gergely, J.; Reaveley, L. D.; and Volnyy, V. A., "Retrofit of Reinforced Concrete Bridges with Carbon Fiber Reinforced Polymer Composites," *Fourth International Symposium for Fiber Reinforced Polymer Reinforcement for Reinforced Concrete Structures*, SP-188, C. W. Dolan, S. H. Rizkalla, and A. Nanni, eds., American Concrete Institute, Farmington Hills, Mich., 1999, pp. 441-453.

34. Gergely, J.; Pantelides, C. P.; and Reaveley, L. D., "Shear Strengthening of RCT-Joints Using CFRP Composites," *Journal of Composites for Construction*, ASCE, V. 4, No. 2, May 2000, pp. 56-64.

35. Prota, A.; Nanni, A.; Manfredi, G.; and Cosenza, E., "Selective Upgrade of Beam-Column Joints with Composites," *Proceedings of the International Conference on FRP Composites in Civil Engineering*, Hong Kong, Dec. 2001.

36. Prota, A.; Manfredi, G.; Nanni, A.; and Cosenza, E., "Selective Seismic Strengthening of RC Frames with Composites," *Proceedings of the Seventh U.S. National Conference on Earthquake Engineering*, Boston, July 2002. (CD-ROM)

37. El-Amoury, T., and Ghobarah, A., "Seismic Rehabilitation of Beam-Column Joint Using GFRP Sheets," *Engineering Structures: The Journal of Earthquake, Wind and Ocean Engineering*, V. 24, No. 11, Nov. 2002, pp. 1397-1407.

38. Clyde, C., and Pantelides, C. P., "Seismic Evaluation and Rehabilitation of R/C Exterior Building Joints," *Proceedings of the Seventh U.S. National Conference on Earthquake Engineering*, Boston, July 2002. (CD-ROM)

39. Antonopoulos, C. P., and Triantafillou, T. C., "Experimental Investigation of FRP-Strengthened RC Beam-Column Joints," *Journal of Composites for Construction*, ASCE, V. 7, No. 1, Feb. 2003, pp. 39-49.

40. Tsonos, A. G., and Stylianidis, K., "Seismic Retrofit of Beam-to-Column Joints with High-Strength Fiber Jackets," *European Earthquake Engineering*, V. 16, No. 2, 2002, pp. 56-72.

41. Karayannis, C. G., and Sirkelis, G. M., "Effectiveness of RC Beam-Column Connections Strengthening Using Carbon-FRP Jackets," *Proceedings of the Twelfth European Conference on Earthquake Engineering*, London, Sept. 2002, PR 549. (CD-ROM)

42. Pantazopoulou, S., and Bonacci, J., "Consideration of Questions about Beam-Column Joints," *ACI Structural Journal*, V. 89, No. 1, Jan.-Feb. 1992, pp. 27-36.

43. Dogan, E.; Hill, H.; and Krstulovic-Opara, N., "Suggested Design Guidelines for Seismic Retrofit with SIMCON and SIFCON," *High-Performance Fiber-Reinforced Concrete in Infrastructural Repair and Retrofit*, SP-185, N. Krstulovic-Opara and Z. Bayasi, eds., American Concrete Institute, Farmington Hills, Mich., 2000, pp. 207-248.

44. Shannag, M. J.; Barakat, S.; and Abdul-Kareem, M., "Cyclic Behavior of HPFRC-Repaired Reinforced Concrete Interior Beam-Column Joints," *Materials and Structures*, V. 35, 2002, pp. 348-356.

45. Adin, M. A.; Yankelevsky, D. Z.; and Farhey, D. N., "Cyclic Behavior of Epoxy-Repaired Reinforced Concrete Beam-Column Joints," *ACI Structural Journal*, V. 90, No. 2, Mar.-Apr. 1993, pp. 170-179.

46. Pantelides, C. P., and Gergely, J., "Carbon-Fiber-Reinforced Polymer Seismic Retrofit of RC Bridge Bent: Design and In-Situ Validation," *Journal of Composites for Construction*, ASCE, V. 6, No. 1, Feb. 2002, pp. 52-60.

47. Engindeniz, M.; Kahn, L. F.; and Zureick, A., "Repair and Strengthening of Non-Seismically Designed RC Beam-Column Joints: State-of-the-Art," *Research Report* No. 04-4, Georgia Institute of Technology, Atlanta, Ga., Oct. 2004, 58 pp. (available online at http://www.ce.gatech.edu/groups/struct/reports)

APPENDIX

Performance of nonseismically designed beam-column joints

Many catastrophic failures because of earthquakes (Japan, 1978; Algeria, 1980; Italy, 1980; Greece, 1981; Mexico, 1985; Taiwan, 1999; and Turkey, 1999 and 2002)(Fig. A1) have shown the vulnerability of reinforced concrete (RC) joints built before seismic design codes were adopted or built without seismic considerations, even when such codes were in place.[48-50]

Critical details of lightly reinforced RC frames were identified, and their effects on seismic behavior were studied by Pessiki et al.[51] and Beres et al.[3,7,52,53] Through their reviews of detailing manuals and design codes from the past five decades and their consultation with practicing engineers, they identified seven details, shown in Fig. 1, typical and potentially critical to the safety of gravity load-designed (GLD) structures in an earthquake. Their experimental program included testing of 20 interior and 14 exterior full-scale beam-column joints under cyclic static loading, and shaketable tests on a 1/8-scale three-story building. No floor slabs were used in the beam-column joint tests; short transverse prestressed stub beams were used in some specimens. In interior joints having continuous beam bottom reinforcement, failure was due to the heavy damage in the joint and in the column in some cases and due to the beam pulling away from the joint in other cases (Fig. A2(a)). The use of two No. 3 ties in the joint shifted the failure from the joint to the column splice region, with the damage being concentrated below the first column tie. Splitting cracks and loss of cover did not extend along the splice; however, loss of cover led to buckling of column bars in two specimens. Column bar size and arrangement did not affect the peak joint strength. In the case of discontinuous beam bottom reinforcement, cracks appeared in the embedment region, and later the cracks either merged with diagonal joint cracks or proceeded vertically (Fig. A2(b)). The beam bars pulled out at approximately 2/3 of their yield stress. The pullout resistance was independent of the two bar sizes and the two

Fig. A1—Corner joint failure in 1999, Izmit/Turkey earthquake. *Photo courtesy of National Information Service for Earthquake Engineering, University of California, Berkeley.*

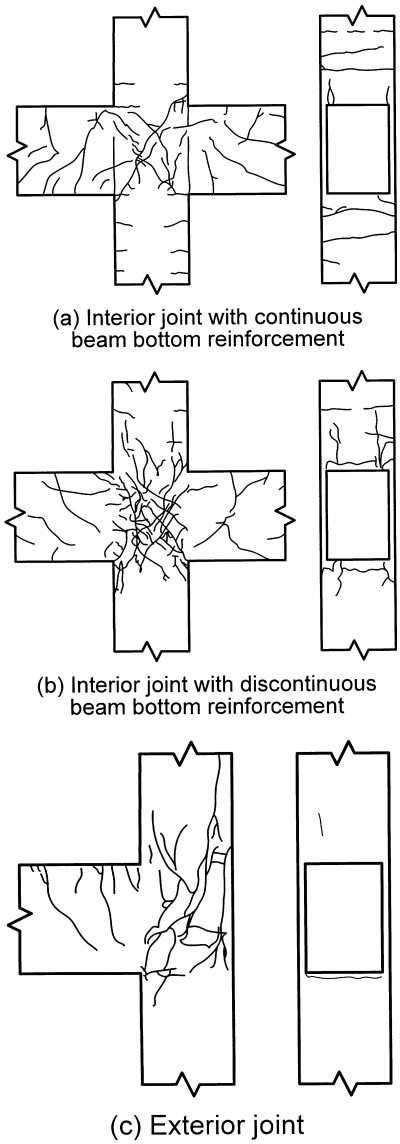

Fig. A2—Typical cracking patterns of non-seismically detailed joints observed by Beres et al.[52]

column axial load levels examined. In the exterior joints, initial cracks around the embedment region proceeded diagonally toward the column bar splice region and extended downward to the bottom column, causing spalling of a large column piece and prying of the beam top bar (Fig. A2(c)). An increase in column axial load resulted in an increase in peak strength (15 to 25%) of both interior and exterior joints, while it reduced strength degradation in exterior specimens. It also delayed the onset of shear cracking and provided better confinement to embedded bars. The beneficial effect of transverse beams as suggested by ACI 352R-91[54] was not supported by experiments using transverse stubs. The maximum experimental shear stresses (0.42 to $1.08\sqrt{f'_c}$ MPa [5 to $13\sqrt{f'_c}$ psi]) were 30 to 40% lower than the maximum capacities allowed by ACI 352R-91[54] to be used in design (note that these ACI guidelines pertain to well-detailed joints in new construction). The main conclusion from shaketable tests on the 1/8-scale building was that lightly reinforced RC structures are very flexible and may show significant P-Δ effects. Floor slabs played a major role in increasing the capacity of beams, thus leading to a soft story column failure.

The results of a comprehensive research program to experimentally and analytically evaluate the behavior of GLD structures, and to assess several retrofit alternatives, were published in the early 1990s.[18-21,55,56]

Aycardi, Mander, and Reinhorn[20] presented the results of unidirectional, quasistatic lateral load tests on one exterior and one interior 1/3-scale beam-column joint designed only for gravity loads. The specimens included a slab and transverse beams on both sides. The exterior subassemblage showed progressive damage starting in the beam, through pullout of discontinuous beam bottom bars, and later damage in the columns. A weak beam-strong column failure was evident with a maximum joint shear stress of $0.87\sqrt{f'_c}$ MPa ($10.5\sqrt{f'_c}$ psi). The interior subassemblage had no joint transverse reinforcement and exhibited progressive damage only in the columns with little damage to the beams. A weak column-strong beam failure and a maximum joint shear stress of $1.04\sqrt{f'_c}$ MPa ($12.5\sqrt{f'_c}$ psi) were observed. For both specimens, the maximum strength occurred between 2 and 3% drift.

The results of Aycardi, Mander, and Reinhorn[20] were then used by Bracci, Reinhorn, and Mander[21] to evaluate the seismic performance of a 1/3-scale three-story GLD model, previously tested by Beres et al.[53] at 1/8 scale. When tested on a shaketable, the 1/3-scale model showed an identical pattern of plastic hinges as the 1/8-scale model, while some differences in base shear demand and story drifts were observed. Bracci, Reinhorn, and Mander[21] stated that: "1) GLD structures were dominated by weak column-strong beam behavior; 2) their response can be predicted with adequate knowledge of component behavior; and 3) they can resist minor earthquakes without considerable damage, but moderate to severe earthquakes cause substantial sidesway deformations exceeding the recommended limits." Both studies[20, 21] concluded that simple retrofit techniques for the interior columns and beam-column joints could improve the hysteretic behavior and prevent formation of column failure mechanisms.

Kunnath et al.[55] performed inelastic time history analyses of three-, six-, and nine-story GLD buildings using a computer program. The effects of discontinuous beam bottom reinforcement, lack of joint shear reinforcement, and level of column and beam confinement were studied. Nonductile details were modeled through several simplifications at critical sections, and hysteretic behavior was obtained from previous tests of Aycardi, Mander, and Reinhorn[20] and Pessiki et al.[57] Four separate earthquake records and three separate degrading hysteretic behavior models were used. Kunnath et al.[55] concluded that buildings will survive moderate earthquakes with some repairable damage; however, they are susceptible to severe damage if subjected to strong ground motions. In the second part of this study, Kunnath et al.[56] used the same analysis tools to evaluate 16 separate detailing enhancements (for each building and each earthquake) including continuity or sufficient anchorage of beam bottom bars, transverse reinforcement in the joints, and additional confinement in the column and/or beam hinge regions. When only continuity of beam bottom bars was provided, the restoration of beam capacity resulted in even more joint failures; damage shifted from beams to columns; and drifts increased. Hence, this enhancement alone was considered detrimental, especially in low-rise buildings, or in upper stories of high-rise buildings. Ensuring adequate joint strength led to a more uniform beam hinging

and to a strong column-weak beam mechanism. Additional confinement in the hinge regions, independent of other enhancements, was not effective in preventing nonductile failures. As expected, the combination of the three detailing strategies proved to yield the best benefits. In this case, when the beam hinging mechanism governed with a slight amount of column hinging in upper floors, the highest story shears and the smallest drifts were obtained.

Hakuto, Park, and Tanaka[22] reported on the performance of three interior (O1, O4, and O5) and two exterior (O6 and O7) one-way joints designed according to pre-1970s practice in New Zealand. The beam bottom bars were continuous through the interior joints, the beam stirrups were widely spaced, and the hooks of the longitudinal beam bars were bent out of the joint core in one of the exterior joints. In one interior joint with beams considerably stronger than the column, the failure was due to bond slippage along the longitudinal beam reinforcement in the joint core followed by joint shear failure. Those with stronger columns exhibited shear failure in the beam. As for the exterior joints with negligible transverse reinforcement, the beams hinged when the hooks of the beam bars were bent into the joint core, while the joint failed in shear when the hooks were bent out of the joint core.

Walker et al.[58] tested seven one-way interior joints without joint reinforcement. To study only the influences of joint shear stress demand and displacement history, their specimens departed from actual GLD buildings in that the beam bottom bars were continuous, the bond demand on beam bars was kept low, and strong column-weak beam was maintained. Two joint shear stress levels (0.75 and $1.29\sqrt{f'_c}$ MPa [9 and $15.5\sqrt{f'_c}$ psi]) and four different displacement histories were used. Within the context of performance-based engineering, five damage states were identified and correlated with story drift. The first joint cracks were observed at 0.5% drift and approximately $0.5\sqrt{f'_c}$ MPa ($6\sqrt{f'_c}$ psi) shear stress. Yielding of beam bars occurred at 1.1 and 1.5% drift for low and high joint shear demands, respectively, with no marked difference due to displacement history. Higher joint shear demand influenced the joint damage adversely. In the case of low shear demand, damage was initiated at the center of joint at 3% drift and the core was damaged at 4%, while these values were 2 and 3%, respectively, in the case of high shear demand. Damage to joint concrete was a function of both the number of cycles and drift amplitude. Final failure was due to significant loss of joint concrete followed by buckling of longitudinal column bars. It was also noted that full symmetric displacement cycles were more damaging than half-asymmetric cycles.

As part of an experimental study on one-way exterior joints with deficient detailing, Clyde and Pantelides[38] defined five levels of performance for two levels of column axial load, similar to those identified by Walker et al.[58] for interior joints. Based on the results of four cyclic joint tests, each level was defined in terms of story drift, crack width, and joint shear strength factor (γ used in joint shear stress expression $\gamma\sqrt{f'_c}$). The crack patterns were very similar to those found previously for other exterior joint tests. In the case of higher column axial load, a 3 to 13% increase in γ and a 20% decrease in energy dissipation capacity were observed; the defined performance levels, with a few exceptions, were reached at smaller drifts, larger crack widths, and larger joint shear strength factors.

The aforementioned studies have all been conducted on test specimens with beams having approximately the same width as that of the columns. Attention was recently drawn by Li, Wu, and Pan[59, 60] to nonseismically detailed narrow beam-wide column joints. In the experimental part of their study,[59] four one-way interior narrow beam-wide column joints were tested with the beams framing into the wide side of the rectangular column in two of the specimens. A strong column-weak beam criterion was satisfied for all specimens. The test variables were the amount of joint transverse reinforcement and the lap splice details for column and beam bars. All specimens exhibited severe joint diagonal cracking after testing. Li, Wu, and Pan[59] stated that "more than 74% of the joint shear force can be carried by the diagonal concrete strut." Columns remained intact except for one specimen in which the lap splice above the joint failed. The lap splicing of the beam bottom bars within the joint did not worsen the performance, and it was suggested that no limitation should be put on the beam bar diameter in the case of wall-like column joints. The addition of 15 and 24% of the joint transverse reinforcement required by NZS 3101:1995[61] did not increase the strength but did improve the ductility and energy dissipation. In the analytical part of their investigation, Li, Wu, and Pan[60] used finite element analyses to study the effect of joint transverse reinforcement, column axial load, and bond condition on the behavior of narrow beam-wide column joints. The analytical predictions were satisfactory except that the pinching of the hysteresis loops observed in the experiments could not be captured analytically. The addition of joint reinforcement improved the behavior but did not prevent the eventual joint failure, and it did not improve the bond conditions for the beam and column bars. For the case in which the beams framed into the wide side of the column, an increase in the column axial load up to 40% of its axial load capacity was found to be beneficial. For wall-like joints, the results on the effect of column axial load were mixed.

In addition to the aforementioned studies, some experimental and analytical results pertaining to the behavior of nonseismically designed joints are also available in several publications in which the performance of a few (usually one or two) reference specimens were used as a basis for evaluating the improvements due to certain repair or strengthening methods.[6-9,14,15,17,18,25-27, 29,30,32-37,39-41,43-46] The behaviors of these specimens were governed by one or a combination of the failure modes. For brevity, their performances are not discussed herein, but are evident from the implemented repair and strengthening methods, which are reviewed in the main body of this paper. The common damage modes that indicated the need for repair/strengthening were: 1) joint shear cracks and spalling of joint concrete; 2) cracks initiating at the joint embedment region, generally combining with the diagonal joint cracks, followed by pullout of discontinuous beam bottom bars; 3) growing of diagonal joint cracks toward the column bar splice region especially in the case of exterior joints; 4) spalling of concrete at the back of exterior joints, sometimes followed by prying of beam top bars with 90-degree hooks into the joint; 5) buckling of column bars due to loss of concrete in the joint region; and 6) column and/or limited beam yielding.

REFERENCES

48. Moehle, J. P., and Mahin, S. A., "Observations on the Behavior of Reinforced Concrete Buildings during Earthquakes," *Earthquake-Resistant Concrete Structures: Inelastic Response and Design*, SP-127, S. K. Ghosh, ed., American Concrete Institute, Farmington Hills, Mich., 1991, pp. 67-89.

49. Sezen, H.; Whittaker, A. S.; Elwood, K. J.; and Mosalam, K. M., "Performance of Reinforced Concrete Buildings during the August 17, 1999 Kocaeli, Turkey Earthquake, and Seismic Design and Construction Practise in Turkey," *Engineering Structures: The Journal of Earthquake, Wind and Ocean Engineering*; V. 25, No. 1, Jan. 2003, pp. 103-114.

50. Erdik, M.; Sesetyan, K.; Demircioglu, M. B.; Celep, U.; Biro, Y.; and Uckan, E., "Preliminary Observations on the Sultandagi, Turkey, Earthquake of February 3, 2002," *EERI Special Earthquake Report*, May 2002, 8 pp.

51. Pessiki, S. P.; Conley, C.; White, R. N.; and Gergely, P., "Seismic Behavior of the Beam-Column Connection Region in Lightly-Reinforced Concrete Frame Structures," *Proceedings of Fourth U.S. National Conference on Earthquake Engineering*, Palm Springs, Calif., V. 2, 1990, pp. 707-716.

52. Beres, A.; Pessiki, S. P.; White, R. N.; and Gergely, P., "Seismic Performance of Existing Reinforced Concrete Frames Designed Primarily for Gravity Loads," *Sixth Canadian Conference on Earthquake Engineering*, Toronto, Ontario, Canada, 1991, pp. 655-662.

53. Beres, A.; White, R. N.; Gergely, P.; Pessiki, S. P.; and El-Attar, A., "Behavior of Existing Non-Seismically Detailed Reinforced Concrete Frames," *Proceedings of the Tenth World Conference on Earthquake Engineering*, Balkema, Rotterdam, 1992, pp. 3359-3363.

54. Joint ACI-ASCE Committee 352, "Recommendations for Design of Beam-Column Joints in Monolithic Reinforced Concrete Structures (ACI 352R-91 [Reapproved 1997])," American Concrete Institute, Farmington Hills, Mich., 1992, 21 pp.

55. Kunnath, S. K.; Hoffmann, G.; Reinhorn, A. M.; and Mander, J. B., "Gravity-Load-Designed Reinforced Concrete Buildings—Part I: Seismic Evaluation of Existing Construction," *ACI Structural Journal*, V. 92, No. 3, May-June 1995, pp. 343-354.

56. Kunnath, S. K.; Hoffmann, G.; Reinhorn, A. M.; and Mander, J. B., "Gravity Load-Designed Reinforced Concrete Buildings—Part II: Evaluation of Detailing Enhancements," *ACI Structural Journal*, V. 92, No. 4, July-Aug. 1995, pp. 470-478.

57. Pessiki, S. P.; Conley, C. H.; Gergely, P.; and White, R. N., "Seismic Behavior of Lightly Reinforced Concrete Column and Beam-Column Joint Details," *Technical Report* NCEER-90-0014, State University of New York, Buffalo, N.Y., 1990.

58. Walker, S. G.; Yeargin, C. M.; Lehman, D. E.; and Stanton, J. F., "Performance-Based Seismic Evaluation of Existing Joints," *Proceedings of the Seventh U.S. National Conference on Earthquake Engineering*, Boston, July 2002. (CD-ROM)

59. Li, B.; Wu, Y.; and Pan, T. C., "Seismic Behavior of Nonseismically Detailed Interior Beam-Wide Column Joints—Part I: Experimental Results and Observed Behavior," *ACI Structural Journal*, V. 99, No. 6, Nov.-Dec. 2002, pp. 791-802.

60. Li, B.; Wu, Y.; and Pan, T. C., "Seismic Behavior of Nonseismically Detailed Interior Beam-Wide Column Joints—Part II: Theoretical Comparisons and Analytical Studies," *ACI Structural Journal*, V. 100, No. 1, Jan.-Feb. 2003, pp. 56-65.

61. Standard Association of New Zealand, "The Design of Concrete Structures (NZS 3101:1995)," Wellington, 1995.